WILSON TOOL

My Account
by Wilson Tool International
Available 24/7

# BYSTRONIC
## PRESS BRAKE TOOLING

2026

# My Account
## by Wilson Tool International

**Wilson Tool Customers have 24/7 access to their account online! My Account allows for:**

- Access to Drawings
- Viewing Invoices
- Tracking Packages
- Reviewing Quote & Order History

**wilsontool.com/MyAccount**

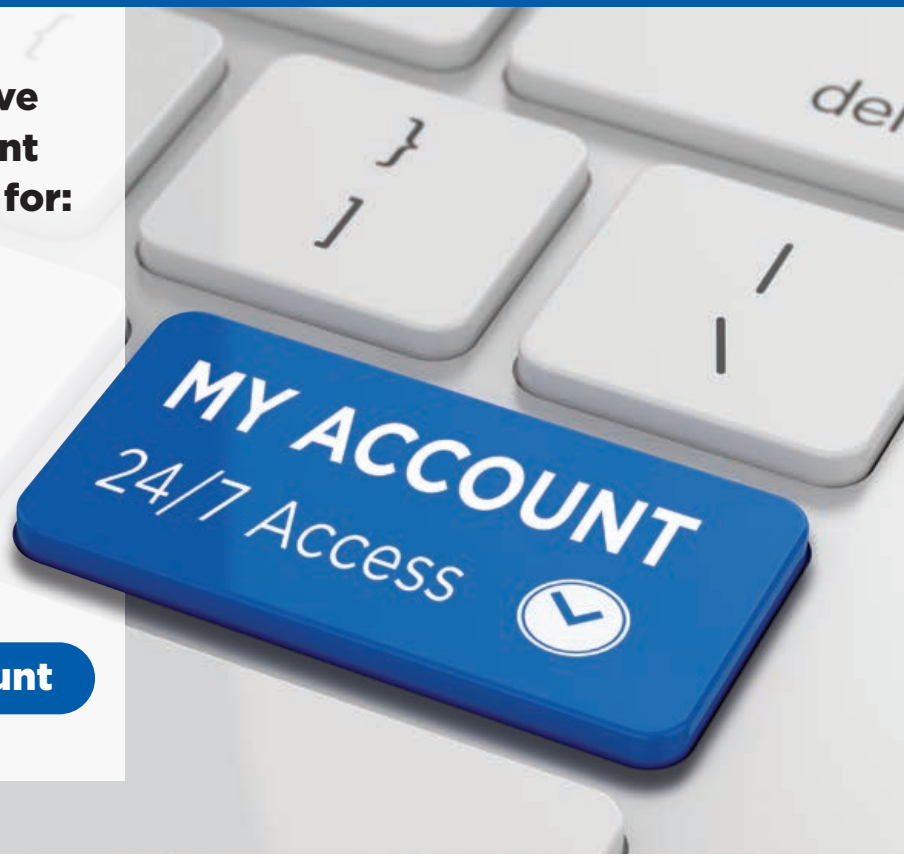


## CONNECT WITH WILSON TOOL

Keep up with everything that's new at Wilson Tool International! Visit our website or find us on social media for the latest information, news, videos and product releases.

**TERMS AND CONDITIONS**

Please note, all orders are subject to Wilson Tool International's Terms and Conditions which include pricing, payment, delivery, warranties, and our return policy. To view our full Terms and Conditions, visit wilsontool.com/en-us/terms-conditions.

Information in this catalog, including pricing and product availability, is subject to change. Wilson Tool International reserves the right to modify data, specifications, and illustrations without notice and are not liable for errors or printing mistakes.

# BYSTRONIC PRESS BRAKE TOOLING

TABLE OF CONTENTS


**About Wilson Tool International . . . . . 4**

**Bystronic Tooling . . . . . 5–6**

Tooling Overview . . . . . 5

Ear Piece Specifications . . . . . 5

Tip Modifications . . . . . 5

Sectionalized Tooling Lengths . . . . . 6

**RF-A Punches . . . . . 7–14**

P2 – 85° Sash Punch (10mm Tip Flat) . . . 7

P3 – 85° Sash Punch (12mm Tip Flat) . . . 8

P4 – 85° Gooseneck Punch . . . . . 9

P5 – 30° Acute Punch . . . . . 10

P6 – 30° Straight Punch . . . . . 11

P7 – 30° Straight Punch . . . . . 12

P8 – 85° Gooseneck Punch . . . . . 13

P9 – 60° Straight Punch . . . . . 14

**Bend Limit Graphs . . . . . 15–23**

**RF-A Dies . . . . . 24–41**

V-Series Black (VSB) Dies . . . . . 24–27

V4 . . . . . 28

V6 . . . . . 29

V8 . . . . . 30

V10 . . . . . 31

V12 . . . . . 32

V16 . . . . . 33

V20 . . . . . 34

V24 . . . . . 35

V32 . . . . . 36

V40 . . . . . 37

V50 . . . . . 38

V60 . . . . . 39

V80 . . . . . 40

V100 . . . . . 41

V120 . . . . . 41

**Sets & Holders . . . . . 42–47**

Hemming . . . . . 42–43

Flattening . . . . . 44–45

Offsets . . . . . 46

Holders . . . . . 47

**Special Tooling . . . . . 48–69**

**Reference Info . . . . . 70–73**

Tonnage Estimates . . . . . 70

Air Bending Force Charts . . . . . 71–72

Specials Checklist . . . . . 73

**Accessories . . . . . 74–78**

**The Divisions of Wilson Tool . . . . . 79**


*Prices and product availability are subject to change without notice.*

# ABOUT WILSON TOOL INTERNATIONAL

From humble beginnings in a small manufacturing facility in St. Paul, Minnesota, Wilson Tool International has added manufacturing facilities and sales channels around the world to better serve our thousands of global customers. Throughout our expansion, our mission has never wavered — we continue to offer products and services that help you be more successful. Every product you buy, every employee with whom you communicate, and every training event you attend, are designed to help customers just like you be more successful.

At Wilson Tool, we continue to invest in your success through constant innovation. Our tooling and solutions represent decades of knowledge and experience in assisting manufacturers resolve their most challenging fabrication issues. We understand that no two jobs are the same. Change is the only constant in manufacturing. So, working with a tooling supplier who's flexible, nimble, and knowledgeable is important.

Our goal is to deliver exceptional **customer service** along with the most reliable and innovative products and solutions so that our **customers** can be more successful.

When you have a challenge, reach out to us. At Wilson Tool we are more than tools... we are solutions. Your local Sales Engineer is available in person, by phone and through e-mail. Let us put our many decades of expertise to the test. We will work with you to find the best possible solution to whatever challenge you may be facing. And every order comes with our guarantee to outperform your current tooling.

From all of us at Wilson Tool, thank you for the trust you have placed in us to provide products and services that are critical to your business. We look forward to your continued success as we head into the future.

Visit **wilsontool.com/MyAccount** for Drawings, Invoices, Tracking & More!

# BYSTRONIC PRESS BRAKE TOOLING

**Precision Tooling from the Supplier You Trust to Deliver**

Bystronic precision press brake tooling is manufactured to a tolerance of ± .0004″ [.01mm] on all critical dimensions. Standard lengths can be mixed and matched to make length with consistent bending quality.

- Tools can be loaded by a single operator
- Heat treated with a black finish to prevent corrosion

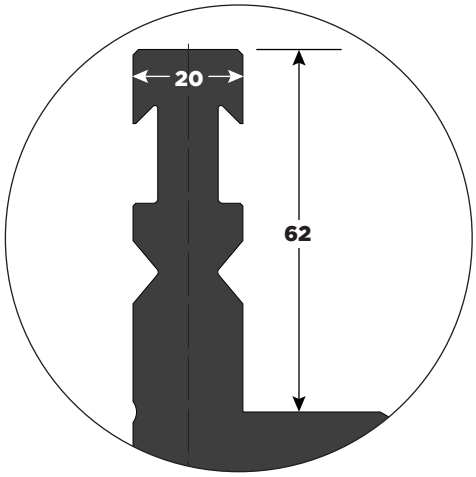


**Bystronic RF-A Tang**

**Ear Piece Specifications**

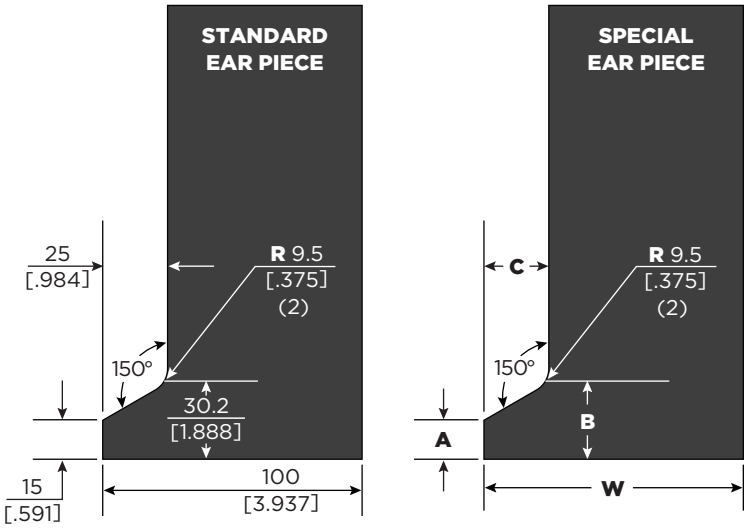


To order a special ear section, indicate the A, B, C and W dimensions.

**Tip Modifications**

Tip modifications are available in all styles and sizes.

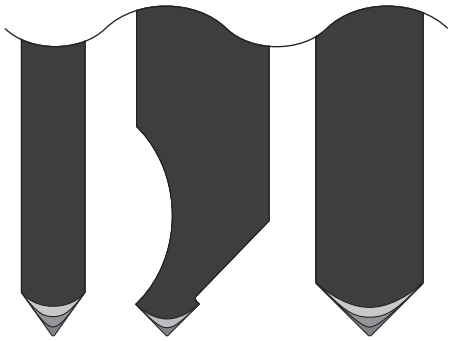

# BYSTRONIC PRESS BRAKE TOOLING



## STANDARD PUNCH & DIE SECTION LENGTHS

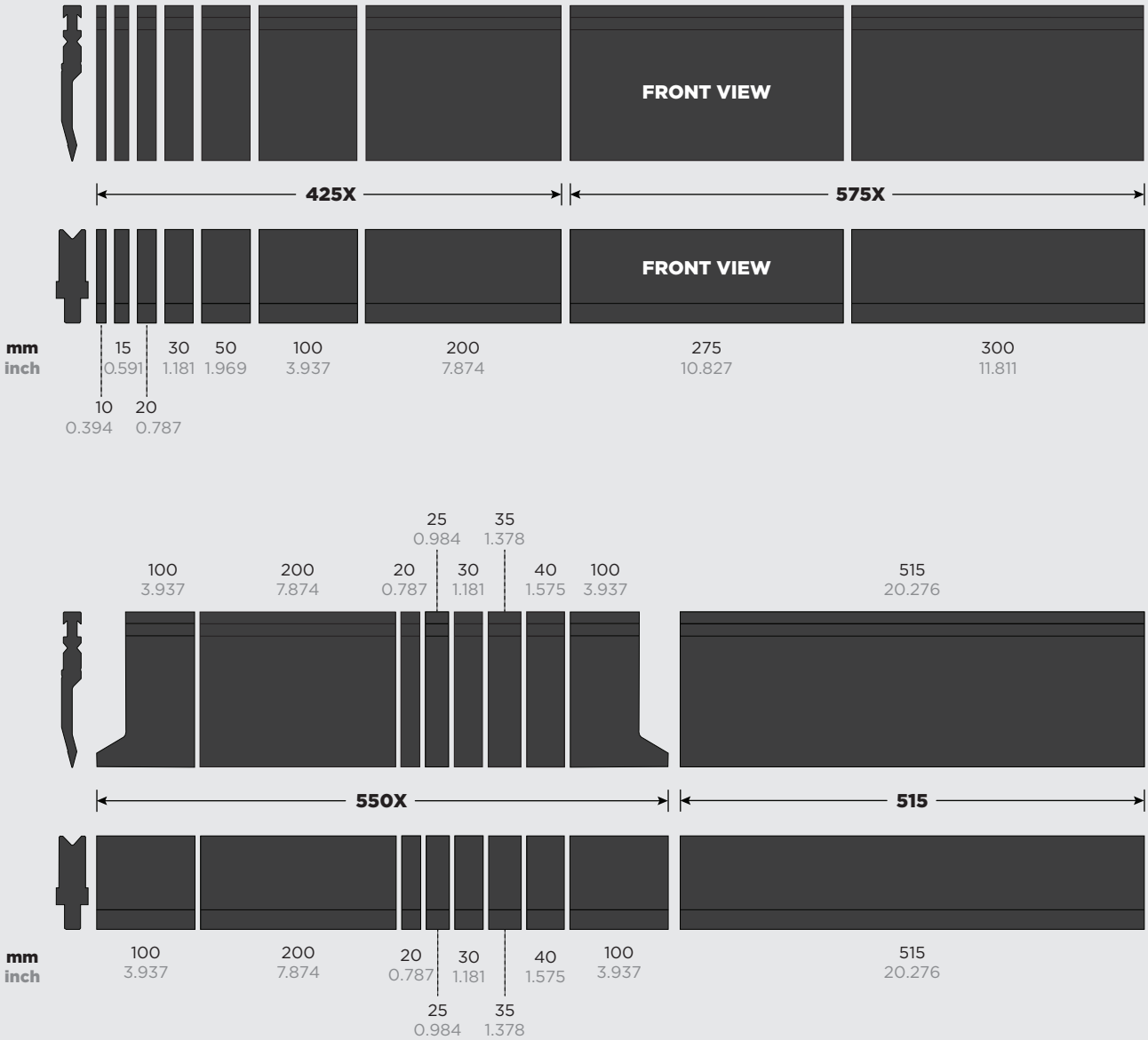




Visit **wilsontool.com/MyAccount** for Drawings, Invoices, Tracking & More!

# 85° SASH PUNCHES — P2
# 10mm TIP FLAT

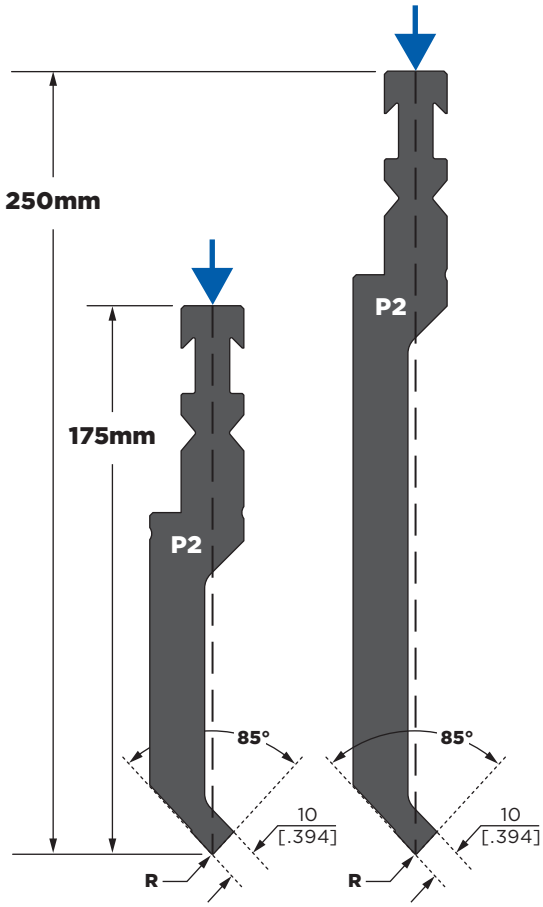


Indicates how tonnage is applied to punches

| | Part No. | R Tip Radius mm [in.] | kN/m | Max. Ton m [ft.] | 515 20.276″ [515mm] | Sectionalized 575x 22.638″ [575mm] | 550x 21.654″ [550mm] | 425x 16.732″ [425mm] |
|---|---|---|---|---|---|---|---|---|
| **P2 SERIES – 85° SASH PUNCH (10mm TIP)** | | | | | | | | |
| 175 [6.889] | EB1185005 P2 175 .5mm | 0.5 [.020] | 850 | 87 [26] | | | | |
| | EB1185010 P2 175 1mm | 1.0 [.039] | 1,000 | 102 [31] | | | | |
| | | | | **Approx. Gross Weight Unboxed:** | 28 lbs. | 31 lbs. | 27 lbs. | 23 lbs. |
| 250 [9.843] | EB2185005 P2 250 .5mm | 0.5 [.020] | 850 | 87 [26] | | | | |
| | EB2185010 P2 250 1mm | 1.0 [.039] | 1,000 | 102 [31] | | | | |
| | | | | **Approx. Gross Weight Unboxed:** | 39 lbs. | 44 lbs. | 38 lbs. | 32 lbs. |

Tooling for special application available upon request. Tonnage for ear sections is 20% less than the stated capacity above.

# 85° SASH PUNCHES — P3
# 12mm TIP FLAT

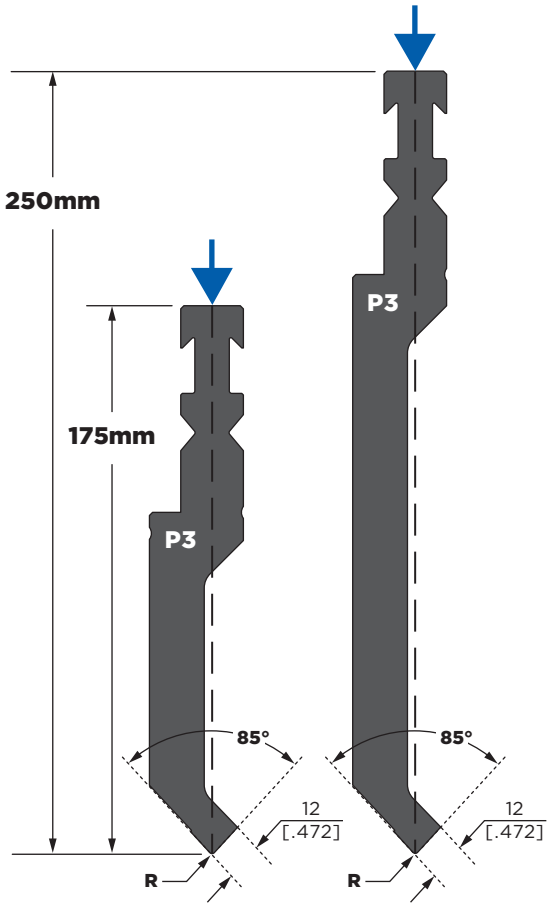


Indicates how tonnage is applied to punches

| H Height mm [in.] | Part No. | R Tip Radius mm [in.] | kN/m | Max. Ton m [ft.] | 515 20.276″ [515mm] | Sectionalized 575x 22.638″ [575mm] | 550x 21.654″ [550mm] | 425x 16.732″ [425mm] |
|---|---|---|---|---|---|---|---|---|
| **P3 SERIES – 85° SASH PUNCH (12mm TIP)** | | | | | | | | |
| 175 [6.889] | EB1785010 P3 175 1mm | 1.0 [.039] | 1,300 | 133 [40] | | | | |
| | EB1785030 P3 175 3mm | 3.0 [.118] | 1,100 | 112 [34] | | | | |
| | **Approx. Gross Weight Unboxed:** | | | | 28 lbs. | 31 lbs. | 27 lbs. | 23 lbs. |
| 250 [9.843] | EB2785010 P3 250 1mm | 1.0 [.039] | 1,400 | 142 [43] | | | | |
| | EB2785030 P3 250 3mm | 3.0 [.118] | 1,000 | 102 [31] | | | | |
| | **Approx. Gross Weight Unboxed:** | | | | 40 lbs. | 44 lbs. | 39 lbs. | 33 lbs. |

Tooling for special application available upon request. Tonnage for ear sections is 20% less than the stated capacity above.





Visit **wilsontool.com/MyAccount** for Drawings, Invoices, Tracking & More!

# 85° GOOSENECK PUNCHES — P4

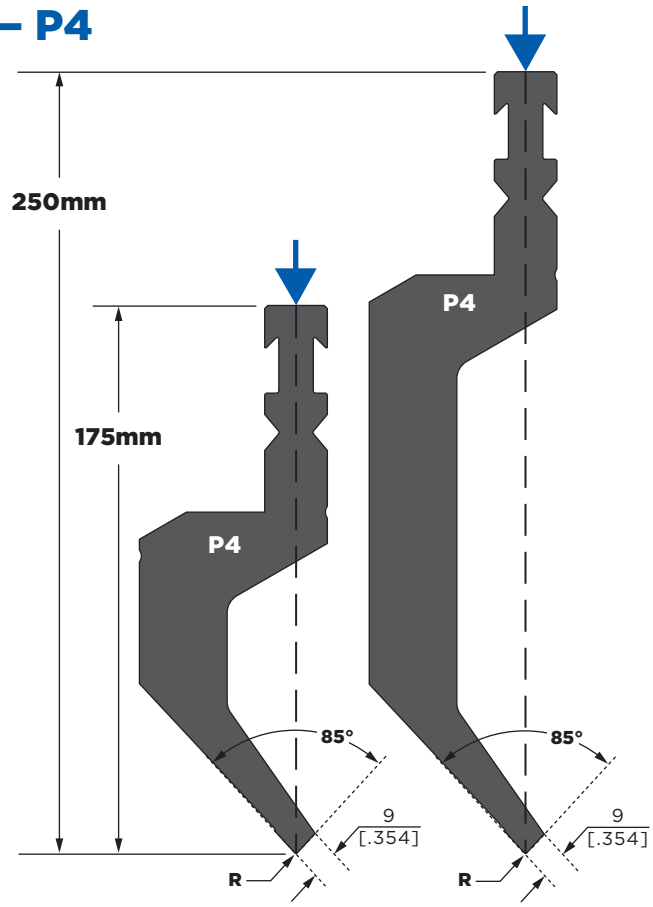


Indicates how tonnage is applied to punches

| H Height mm [in.] | Part No. | R Tip Radius mm [in.] | kN/m | Max. Ton m [ft.] | 515 20.276" [515mm] | Sectionalized 575x 22.638" [575mm] | Sectionalized 550x 21.654" [550mm] | Sectionalized 425x 16.732" [425mm] |
|---|---|---|---|---|---|---|---|---|
| **P4 SERIES — 85° GOOSENECK PUNCH** | | | | | | | | |
| 175 [6.889] | EB1085005 P4 175 .5mm | 0.5 [.020] | 550 | 56 [17] | | | | |
| | EB1085010 P4 175 1mm | 1.0 [.039] | 600 | 61 [18] | | | | |
| | EB1085015 P4 175 1.5mm | 1.5 [.059] | | | | | | |
| | EB1085030 P4 175 3mm | 3.0 [.118] | | | | | | |
| | EB1085060 P4 175 6mm | 6.0 [.236] | | | | | | |
| | | | | **Approx. Gross Weight Unboxed:** | 37 lbs. | 42 lbs. | 37 lbs. | 31 lbs. |
| 250 [9.843] | EB2085005 P4 250 .5mm | 0.5 [.020] | 550 | 56 [17] | | | | |
| | EB2085010 P4 250 1mm | 1.0 [.039] | 600 | 61 [18] | | | | |
| | EB2085015 P4 250 1.5mm | 1.5 [.059] | | | | | | |
| | EB2085030 P4 250 3mm | 3.0 [.118] | | | | | | |
| | EB2085060 P4 250 6mm | 6.0 [.236] | | | | | | |
| | | | | **Approx. Gross Weight Unboxed:** | 56 lbs. | 62 lbs. | 54 lbs. | 46 lbs. |

Tooling for special application available upon request. Tonnage for ear sections is 20% less than the stated capacity above.

# 30° ACUTE PUNCHES — P5

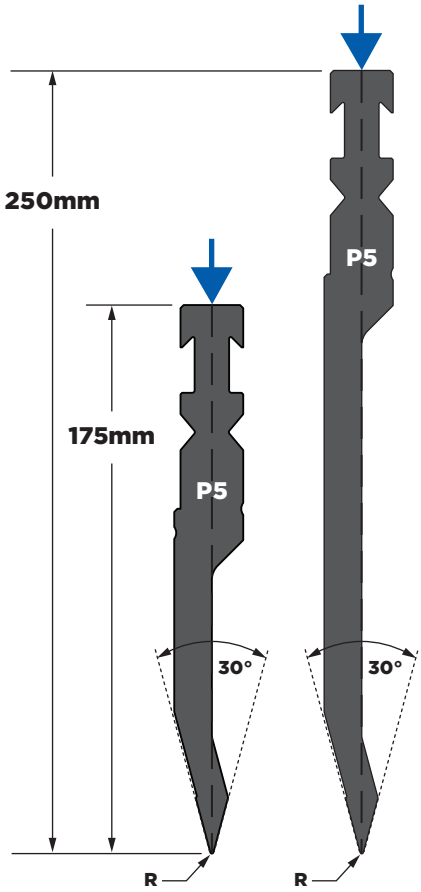


Indicates how tonnage is applied to punches

| H Height mm [in.] | Part No. | R Tip Radius mm [in.] | kN/m | Max. Ton m [ft.] | 515 20.276″ [515mm] | Sectionalized 575x 22.638″ [575mm] | Sectionalized 550x 21.654″ [550mm] | Sectionalized 425x 16.732″ [425mm] |
|---|---|---|---|---|---|---|---|---|
| **P5 SERIES — 30° ACUTE PUNCH** | | | | | | | | |
| 175 [6.889] | EB1230005 P5 175 .5mm | 0.5 [.020] | 700 | 71 [21] | | | | |
| | EB1230010 P5 175 1mm | 1.0 [.039] | 1,000 | 102 [31] | | | | |
| | EB1230015 P5 175 1.5mm | 1.5 [.059] | | | | | | |
| | EB1230030 P5 175 3mm | 3.0 [.118] | | | | | | |
| | | | | **Approx. Gross Weight Unboxed:** | 21 lbs. | 24 lbs. | 21 lbs. | 18 lbs. |
| 250 [9.843] | EB2230005 P5 250 .5mm | 0.5 [.020] | 700 | 71 [21] | | | | |
| | EB2230010 P5 250 1mm | 1.0 [.039] | 750 | 76 [23] | | | | |
| | EB2230015 P5 250 1.5mm | 1.5 [.059] | 1,000 | 102 [31] | | | | |
| | EB2230030 P5 250 3mm | 3.0 [.118] | | | | | | |
| | | | | **Approx. Gross Weight Unboxed:** | 30 lbs. | 34 lbs. | 29 lbs. | 25 lbs. |

Tooling for special application available upon request. Tonnage for ear sections is 20% less than the stated capacity above.





Visit **wilsontool.com/MyAccount** for Drawings, Invoices, Tracking & More!

# 30° STRAIGHT PUNCHES — P6

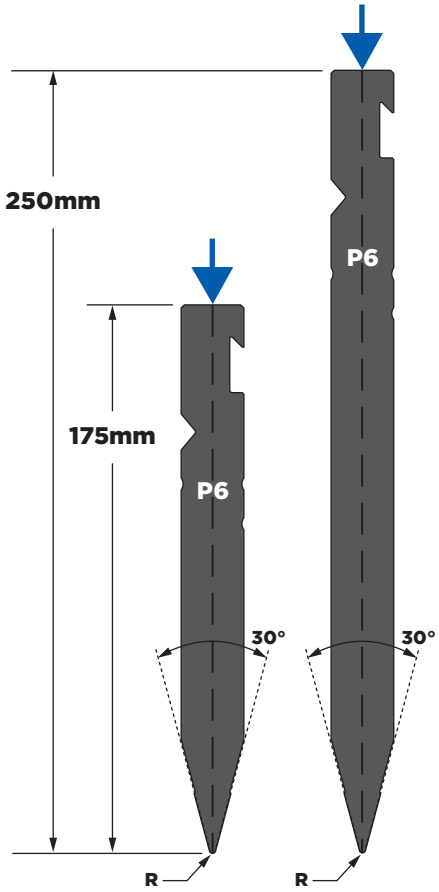


Indicates how tonnage is applied to punches

| H Height mm [in.] | Part No. | R Tip Radius mm [in.] | kN/m | Max. Ton m [ft.] | 515 20.276″ [515mm] | Sectionalized 575x 22.638″ [575mm] | 550x 21.654″ [550mm] | 425x 16.732″ [425mm] |
|---|---|---|---|---|---|---|---|---|
| **P6 SERIES — 30° STRAIGHT PUNCH** | | | | | | | | |
| 175 [6.889] | EB1430010 P6 175 1mm | 1.0 [.039] | 1,500 | 153 [46] | | | | |
| | **Approx. Gross Weight Unboxed:** | | | | 27 lbs. | 31 lbs. | 27 lbs. | 23 lbs. |
| 250 [9.843] | EB2430010 P6 250 1mm | 1.0 [.039] | 1,500 | 153 [46] | | | | |
| | **Approx. Gross Weight Unboxed:** | | | | 41 lbs. | 45 lbs. | 40 lbs. | 34 lbs. |

Tooling for special application available upon request. Tonnage for ear sections is 20% less than the stated capacity above.

# 30° STRAIGHT PUNCHES — P7

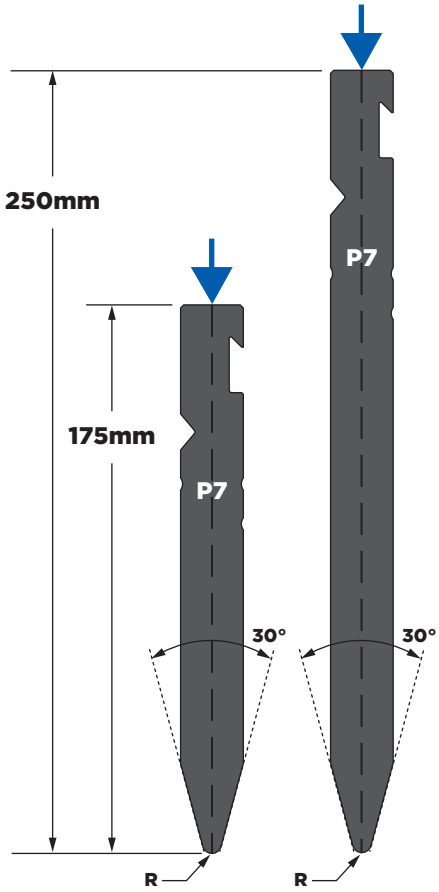


Indicates how tonnage is applied to punches

| H Height mm [in.] | Part No. | R Tip Radius mm [in.] | kN/m | Max. Ton m [ft.] | 515 20.276″ [515mm] | Sectionalized 575x 22.638″ [575mm] | Sectionalized 550x 21.654″ [550mm] | Sectionalized 425x 16.732″ [425mm] |
|---|---|---|---|---|---|---|---|---|
| **P7 SERIES — 30° STRAIGHT PUNCH** | | | | | | | | |
| 175 [6.889] | EB1630030 P7 175 3mm | 3.0 [.118] | 1,600 | 163 [49] | | | | |
| | EB1630050 P7 175 5mm | 5.0 [.197] | | | | | | |
| | EB1630060 P7 175 6mm | 6.0 [.236] | | | | | | |
| | EB1630080 P7 175 8mm | 8.0 [.314] | | | | | | |
| | EB1630100 P7 175 10mm | 10.0 [.393] | | | | | | |
| | EB1630120 P7 175 12mm | 12.0 [.472] | | | | | | |
| | | | | **Approx. Gross Weight Unboxed:** | 30 lbs. | 33 lbs. | 30 lbs. | 24 lbs. |
| 250 [9.843] | EB2630030 P7 250 3mm | 3.0 [.118] | 1,600 | 163 [49] | | | | |
| | EB2630050 P7 250 5mm | 5.0 [.197] | 1,400 | 143 [43] | | | | |
| | EB2630060 P7 250 6mm | 6.0 [.236] | | | | | | |
| | EB2630080 P7 250 8mm | 8.0 [.314] | | | | | | |
| | EB2630100 P7 250 10mm | 10.0 [.393] | 1,600 | 163 [49] | | | | |
| | EB2630120 P7 250 12mm | 12.0 [.472] | | | | | | |
| | | | | **Approx. Gross Weight Unboxed:** | 43 lbs. | 48 lbs. | 42 lbs. | 36 lbs. |

Tooling for special application available upon request. Tonnage for ear sections is 20% less than the stated capacity above.





Visit **wilsontool.com/MyAccount** for Drawings, Invoices, Tracking & More!

# 85° GOOSENECK PUNCHES — P8

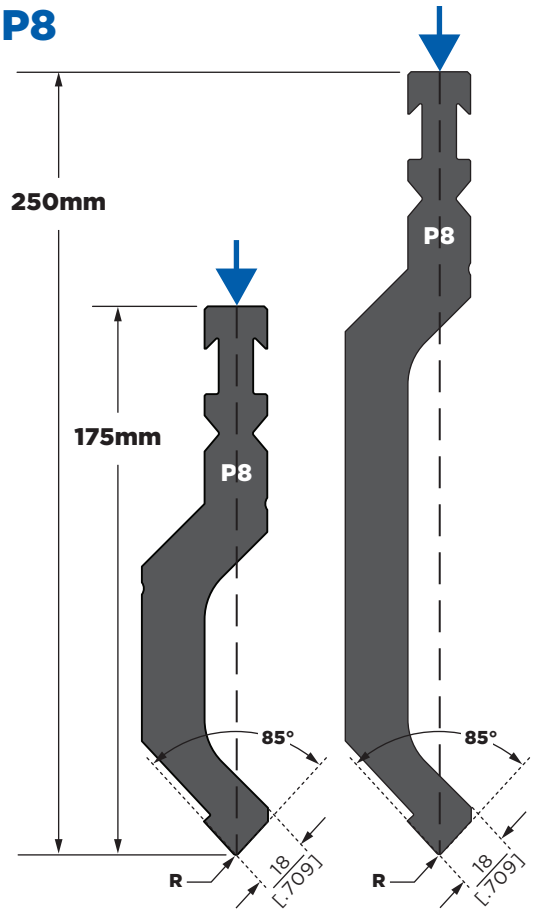


Indicates how tonnage is applied to punches

| H Height mm [in.] | Part No. | R Tip Radius mm [in.] | kN/m | Max. Ton m [ft.] | 515 20.276″ [515mm] | Sectionalized 575x 22.638″ [575mm] | 550x 21.654″ [550mm] | 425x 16.732″ [425mm] |
|---|---|---|---|---|---|---|---|---|
| **P8 SERIES — 85° GOOSENECK PUNCH** | | | | | | | | |
| 175 [6.889] | EB1585010 P8 175 1mm | 1.0 [.039] | 1,000 | 102 [31] | | | | |
| | **Approx. Gross Weight Unboxed:** | | | | 30 lbs. | 34 lbs. | 30 lbs. | 25 lbs. |
| 250 [9.843] | EB2585010 P8 250 1mm | 1.0 [.039] | 1,000 | 102 [31] | | | | |
| | **Approx. Gross Weight Unboxed:** | | | | 44 lbs. | 49 lbs. | 43 lbs. | 36 lbs. |

Tooling for special application available upon request. Tonnage for ear sections is 20% less than the stated capacity above.

# 60° STRAIGHT PUNCHES — P9

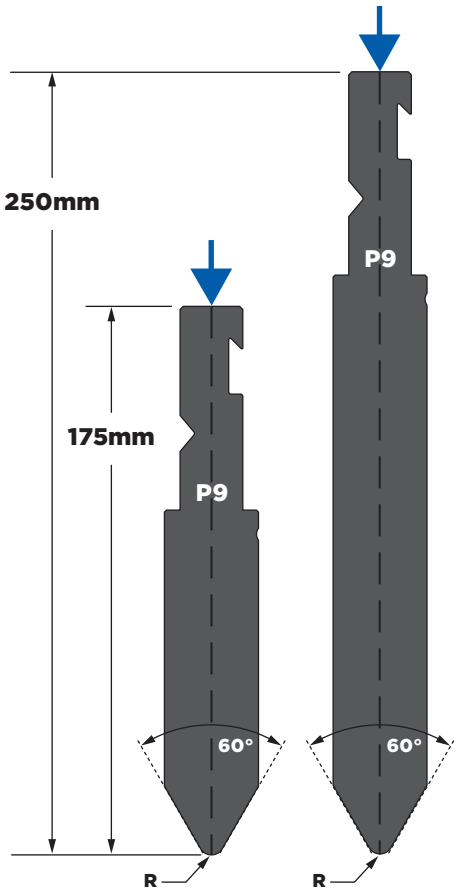


Indicates how tonnage is applied to punches

| H Height mm [in.] | Part No. | R Tip Radius mm [in.] | kN/m | Max. Ton m [ft.] | 515 20.276″ [515mm] | Sectionalized 575x 22.638″ [575mm] | 550x 21.654″ [550mm] | 425x 16.732″ [425mm] |
|---|---|---|---|---|---|---|---|---|
| **P9 SERIES — 60° STRAIGHT PUNCH** | | | | | | | | |
| 175 [6.889] | EB1460040 P9 175 4mm | 4.0 [.157] | 2,000 | 204 [64] | | | | |
| | | | | **Approx. Gross Weight Unboxed:** | 38 lbs. | 42 lbs. | 38 lbs. | 31 lbs. |
| 250 [9.843] | EB2460040 P9 250 4mm | 4.0 [.157] | 2,000 | 204 [64] | | | | |
| | | | | **Approx. Gross Weight Unboxed:** | 58 lbs. | 65 lbs. | 56 lbs. | 48 lbs. |

Tooling for special application available upon request. Tonnage for ear sections is 20% less than the stated capacity above.





Visit **wilsontool.com/MyAccount** for Drawings, Invoices, Tracking & More!

# HOW TO USE A BEND LIMIT GRAPH

Although a bend limit graph won't help with bend sequencing, it will help determine what punch profile is best for you. Visit our YouTube channel for a step-by-step video on using these graphs.

- The graphs are 1:1
- Your part can be laid on top of the catalog page
- Use inside dimensions — always account for material thickness

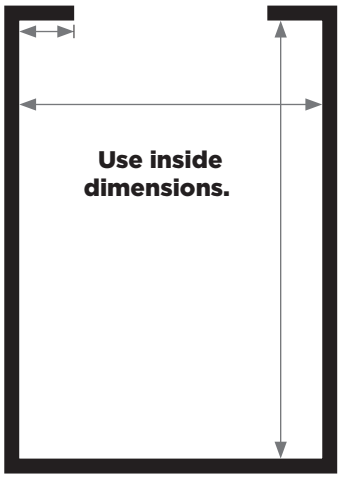


**This application works.**

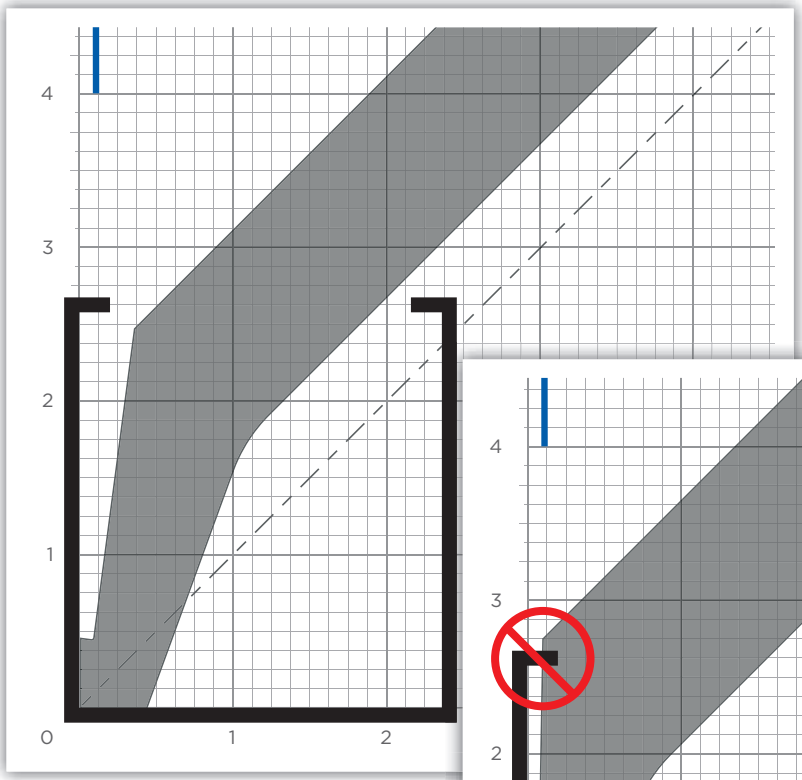


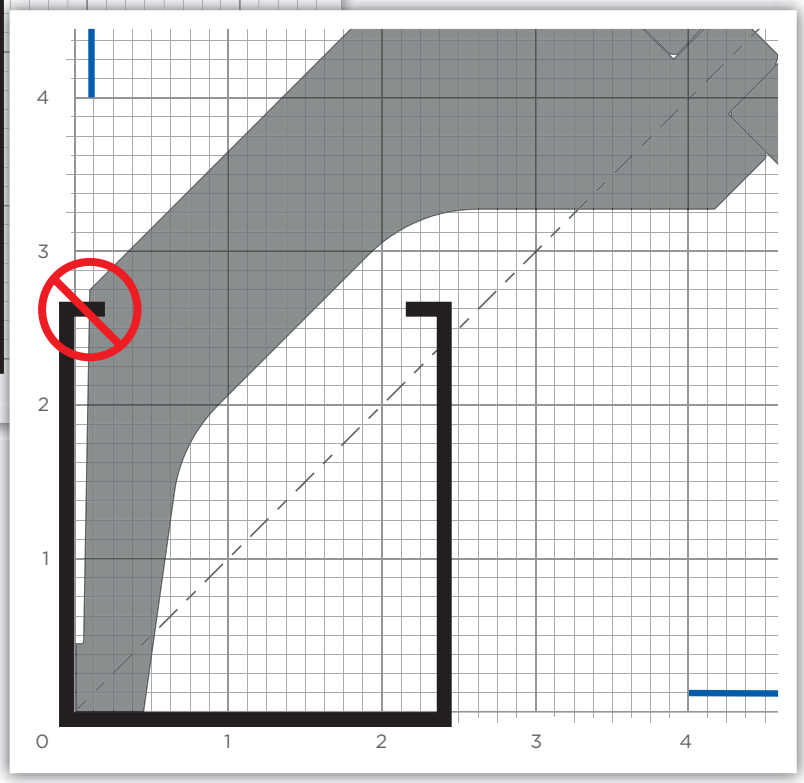


**This application doesn't work.**

Scan QR Code to Watch the Video

# 85° SASH PUNCHES — P2
# 10mm TIP FLAT



| Part No. | |
|---|---|
| 175mm | 250mm |
| EB1185005<br>P2 175 .5mm | EB2185005<br>P2 250 .5mm |
| EB1185010<br>P2 175 1mm | EB2185010<br>P2 250 1mm |

Your radius size may be different than what is shown here. Actual results may vary slightly. Contact a Tooling Technician to ensure accuracy.

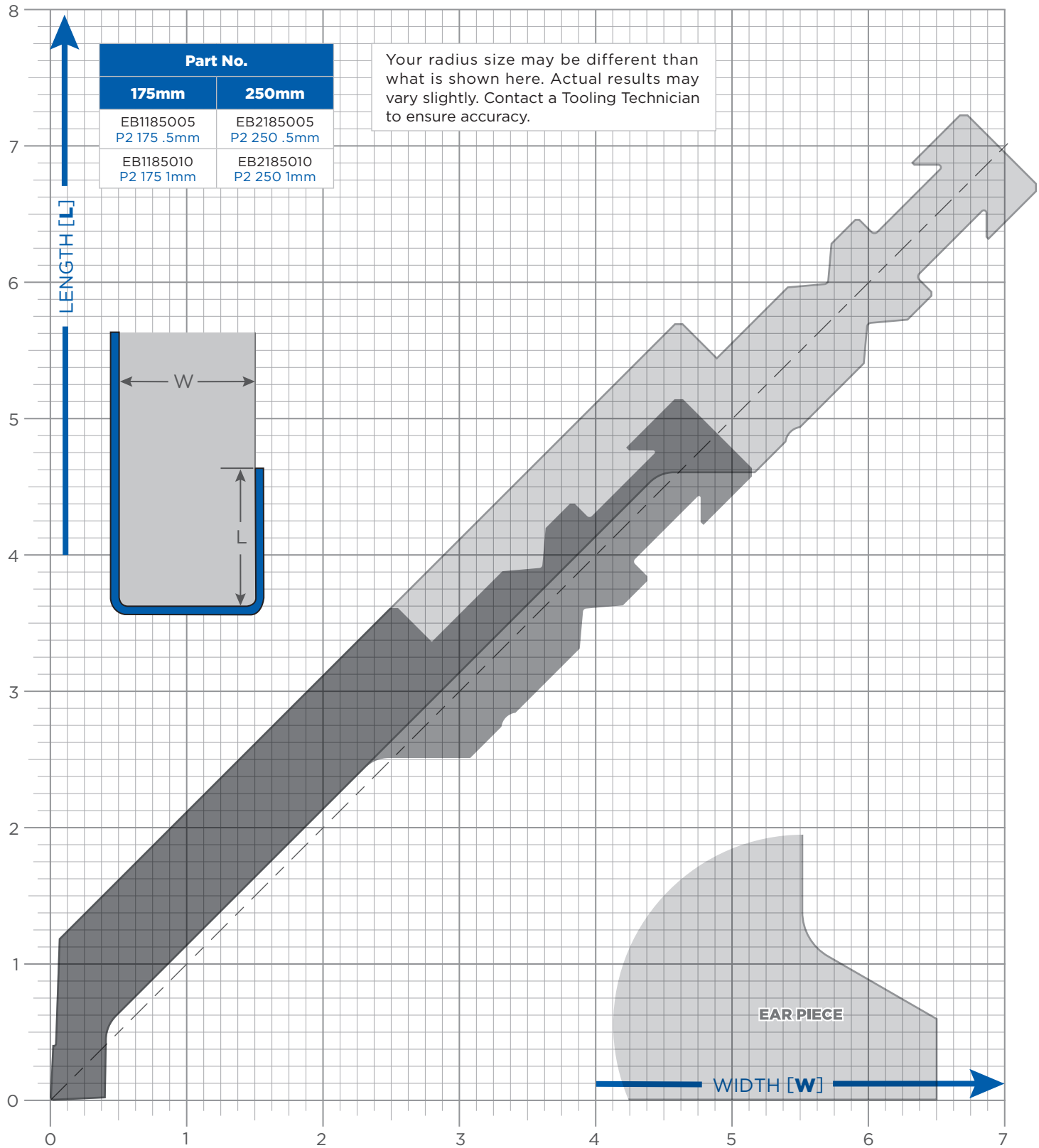




Visit **wilsontool.com/MyAccount** for Drawings, Invoices, Tracking & More!

# 85° SASH PUNCHES — P3
# 12mm TIP FLAT

| Part No. | |
|---|---|
| 175mm | 250mm |
| EB1785010<br>P3 175 1mm | EB2785010<br>P3 250 1mm |
| EB1785030<br>P3 175 3mm | EB2785030<br>P3 250 3mm |

Your radius size may be different than what is shown here. Actual results may vary slightly. Contact a Tooling Technician to ensure accuracy.

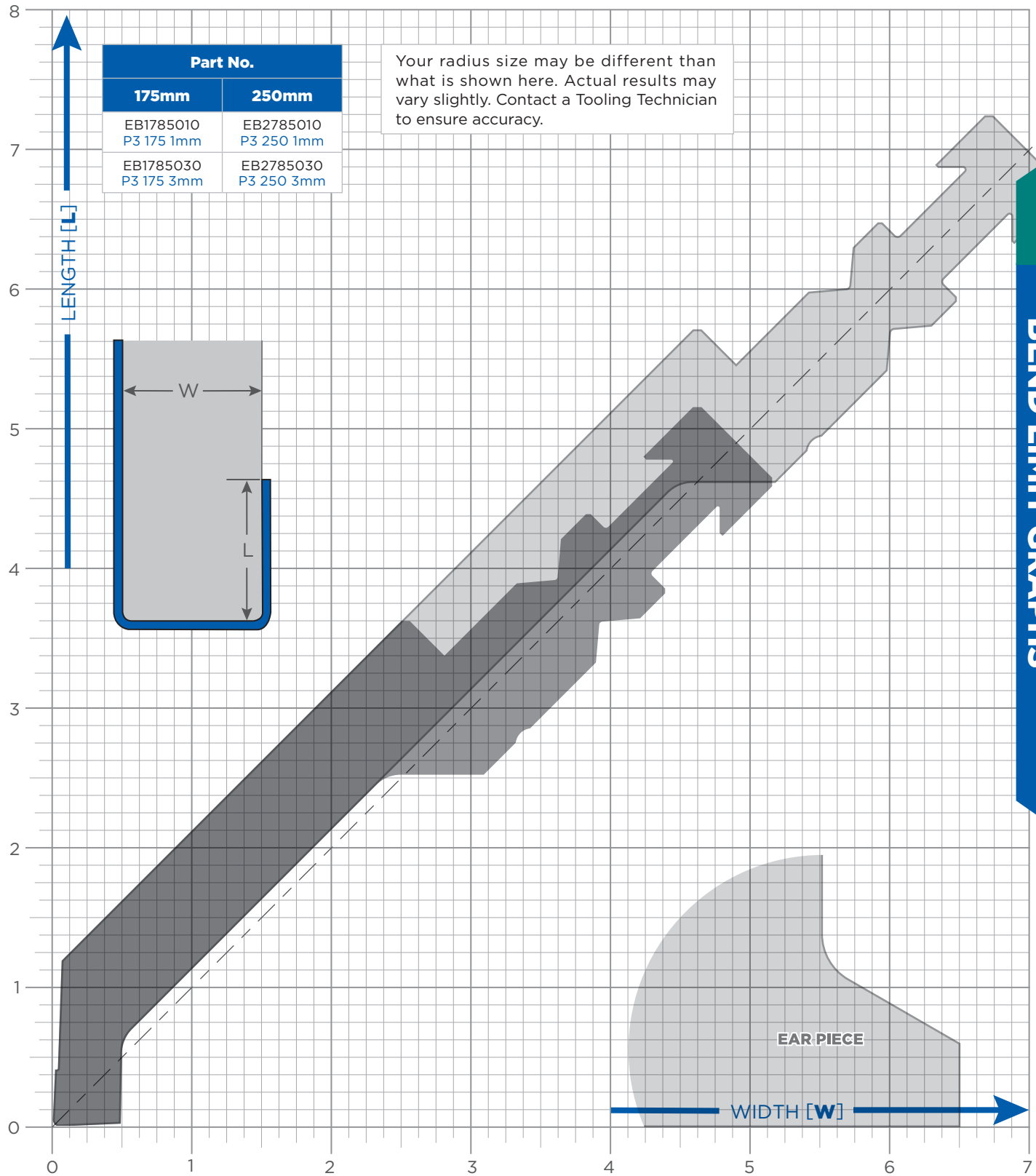


BEND LIMIT GRAPHS

# 85° GOOSENECK PUNCHES — P4



| Part No. | |
|---|---|
| 175mm | 250mm |
| EB1085005<br>P4 175 .5mm | EB2085005<br>P4 250 .5mm |
| EB1085010<br>P4 175 1mm | EB2085010<br>P4 250 1mm |
| EB1085015<br>P4 175 1.5mm | EB2085015<br>P4 250 1.5mm |
| EB1085030<br>P4 175 3mm | EB2085030<br>P4 250 3mm |
| EB1085060<br>P4 175 6mm | EB2085060<br>P4 250 6mm |

Your radius size may be different than what is shown here. Actual results may vary slightly. Contact a Tooling Technician to ensure accuracy.

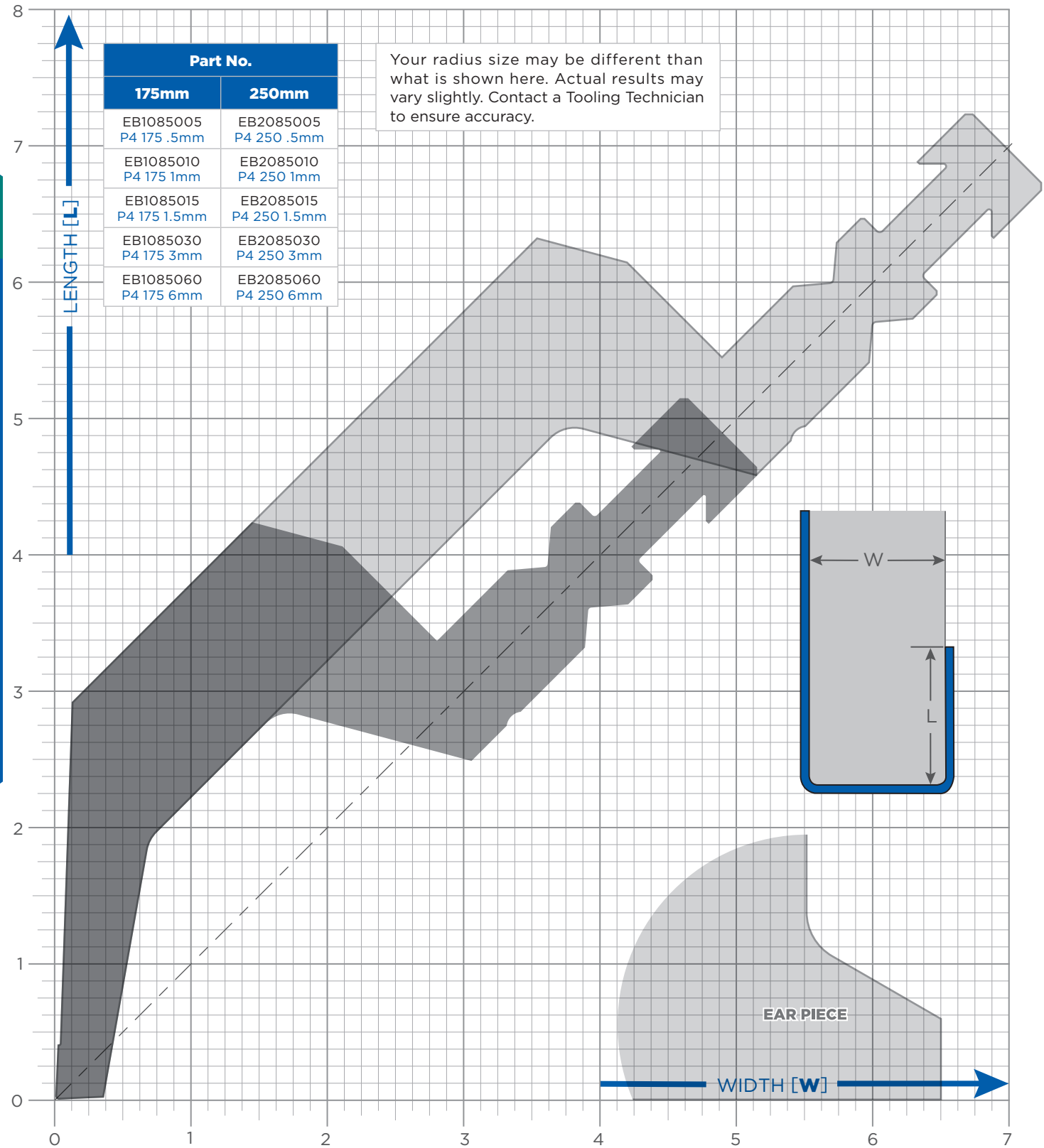




Visit **wilsontool.com/MyAccount** for Drawings, Invoices, Tracking & More!

# 30° ACUTE PUNCHES — P5

| Part No. | |
|---|---|
| **175mm** | **250mm** |
| EB1230005<br>P5 175 .5mm | EB2230005<br>P5 250 .5mm |
| EB1230010<br>P5 175 1mm | EB2230010<br>P5 250 1mm |
| EB1230015<br>P5 175 1.5mm | EB2230015<br>P5 250 1.5mm |
| EB1230030<br>P5 175 3mm | EB2230030<br>P5 250 3mm |

Your radius size may be different than what is shown here. Actual results may vary slightly. Contact a Tooling Technician to ensure accuracy.

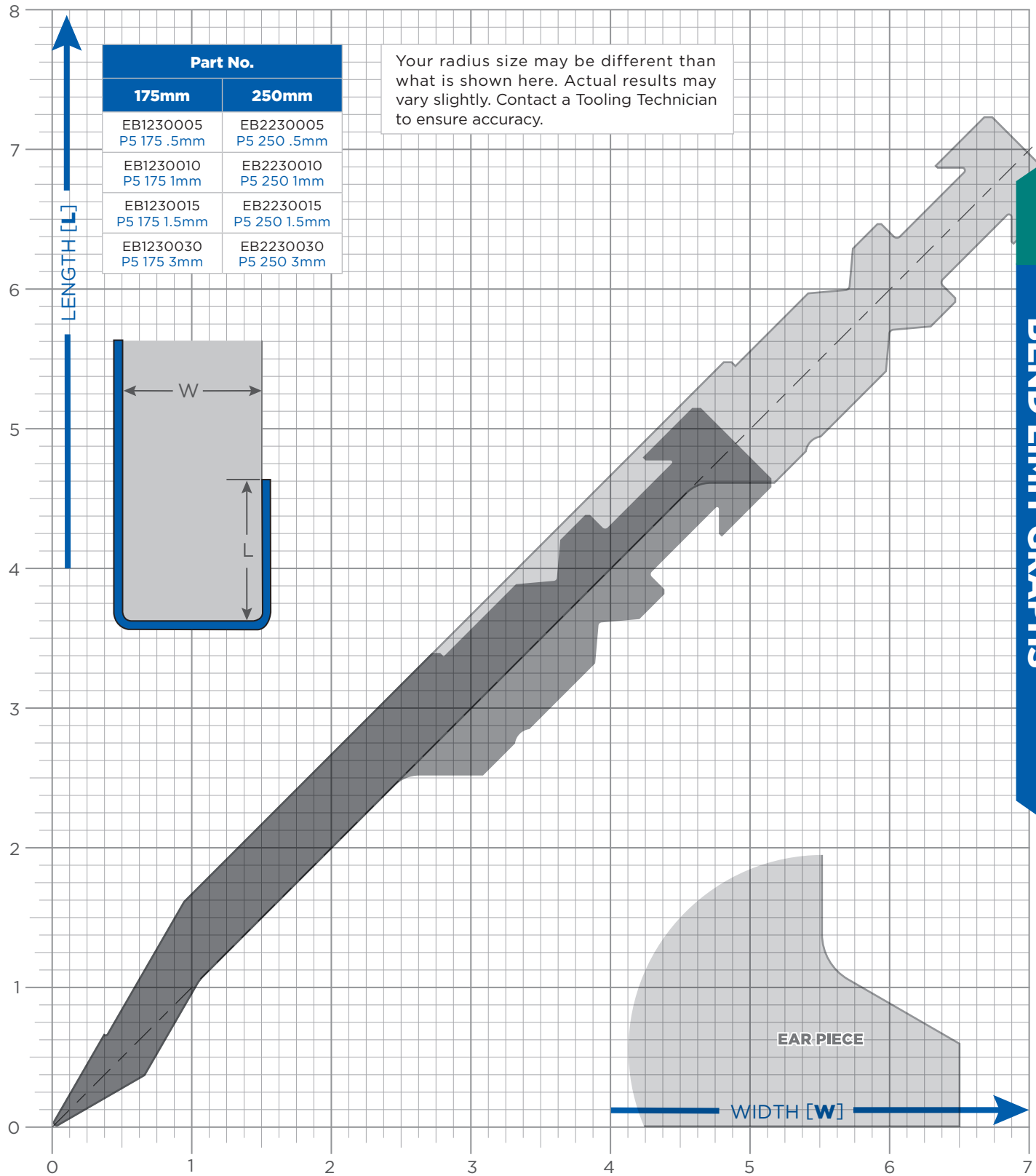


BEND LIMIT GRAPHS

# 30° STRAIGHT PUNCHES — P6



| Part No. | |
|---|---|
| 175mm | 250mm |
| EB1430010<br>P6 175 1mm | EB2430010<br>P6 250 1mm |

Your radius size may be different than what is shown here. Actual results may vary slightly. Contact a Tooling Technician to ensure accuracy.

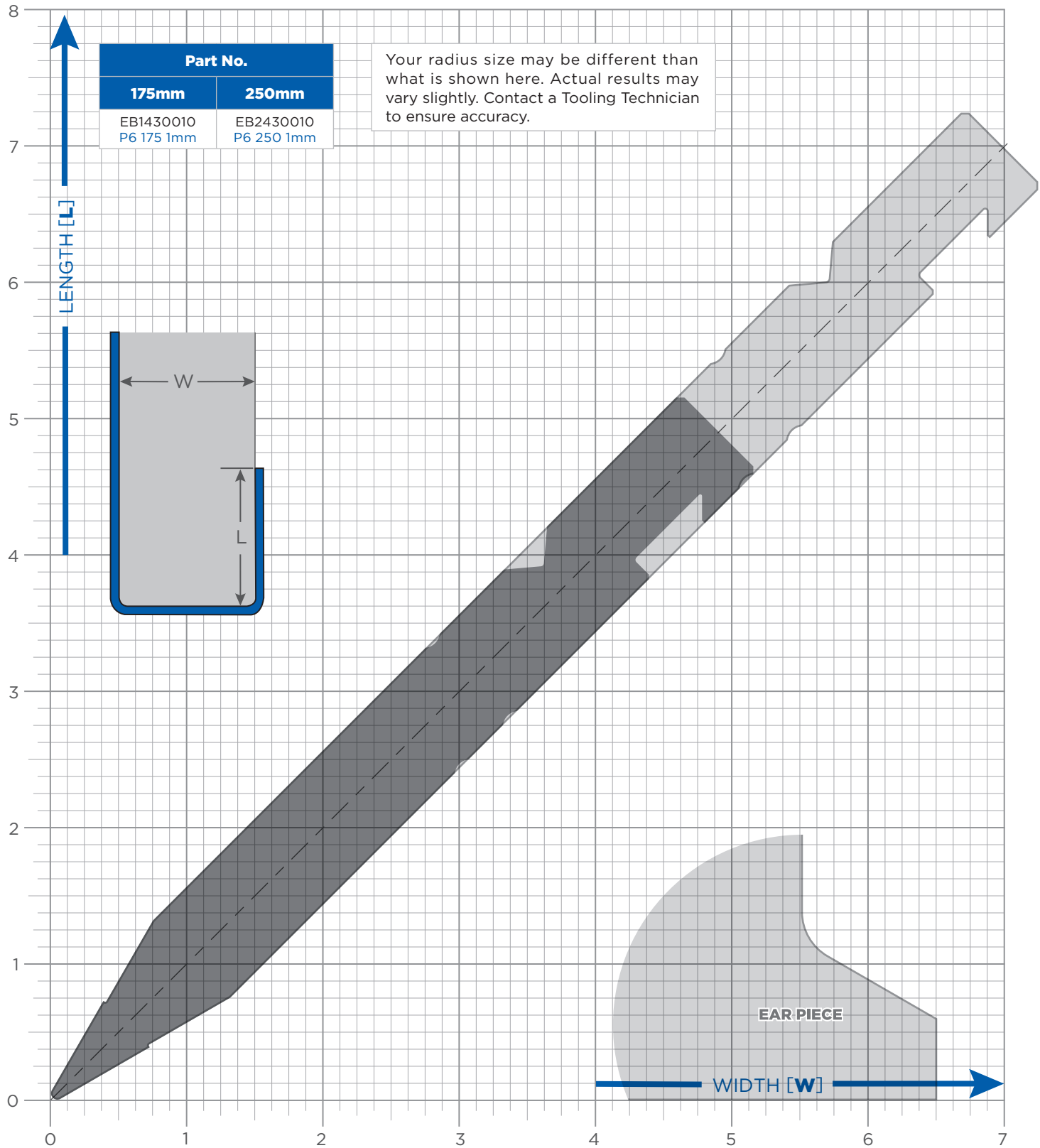




Visit **wilsontool.com/MyAccount** for Drawings, Invoices, Tracking & More!

# 30° STRAIGHT PUNCHES — P7

| Part No. | |
|---|---|
| 175mm | 250mm |
| EB1630030<br>P7 175 3mm | EB2630030<br>P7 250 3mm |
| EB1630050<br>P7 175 5mm | EB2630050<br>P7 250 5mm |
| EB1630060<br>P7 175 6mm | EB2630060<br>P7 250 6mm |
| EB1630080<br>P7 175 8mm | EB2630080<br>P7 250 8mm |
| EB1630100<br>P7 175 10mm | EB2630100<br>P7 250 10mm |
| EB1630120<br>P7 175 12mm | EB2630120<br>P7 250 12mm |

Your radius size may be different than what is shown here. Actual results may vary slightly. Contact a Tooling Technician to ensure accuracy.

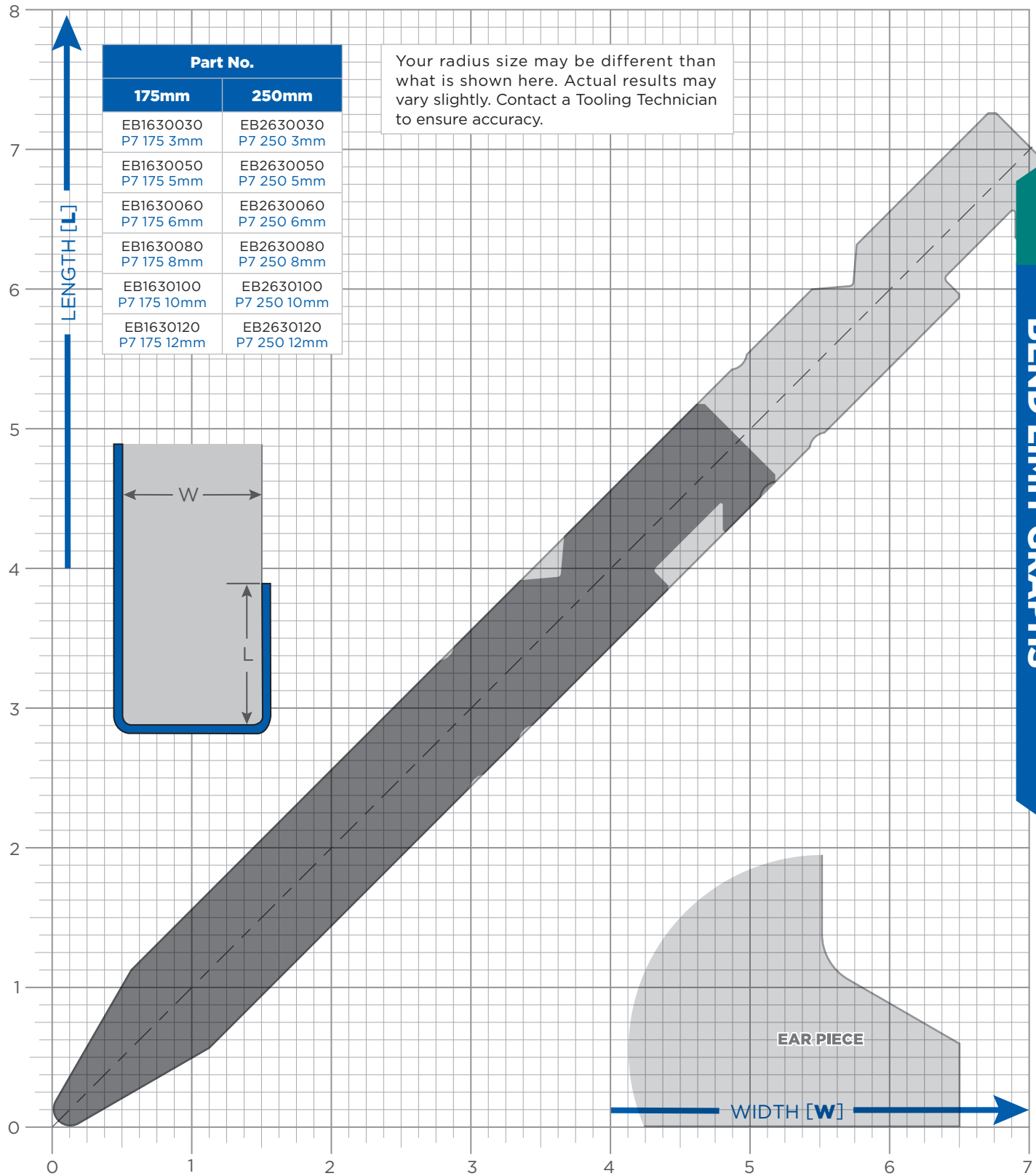


BEND LIMIT GRAPHS

# 85° GOOSENECK PUNCHES — P8



| Part No. | |
|---|---|
| 175mm | 250mm |
| EB1585010<br>P8 175 1mm | EB2585010<br>P8 250 1mm |

Your radius size may be different than what is shown here. Actual results may vary slightly. Contact a Tooling Technician to ensure accuracy.

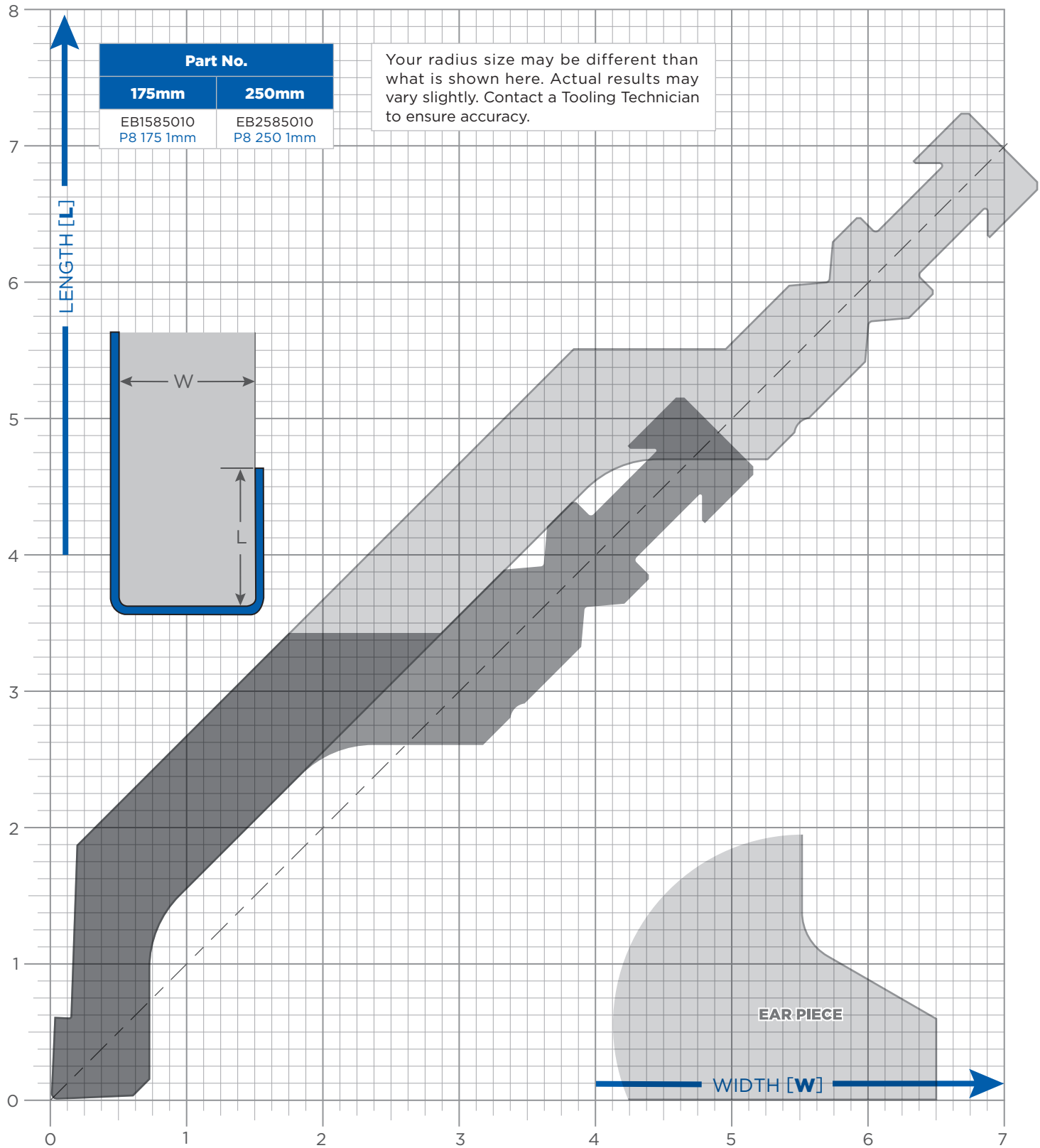




Visit **wilsontool.com/MyAccount** for Drawings, Invoices, Tracking & More!

# 60° STRAIGHT PUNCHES — P9

| Part No. | |
|---|---|
| 175mm | 250mm |
| EB1460040<br>P9 175 4mm | EB2460040<br>P9 250 4mm |

Your radius size may be different than what is shown here. Actual results may vary slightly. Contact a Tooling Technician to ensure accuracy.

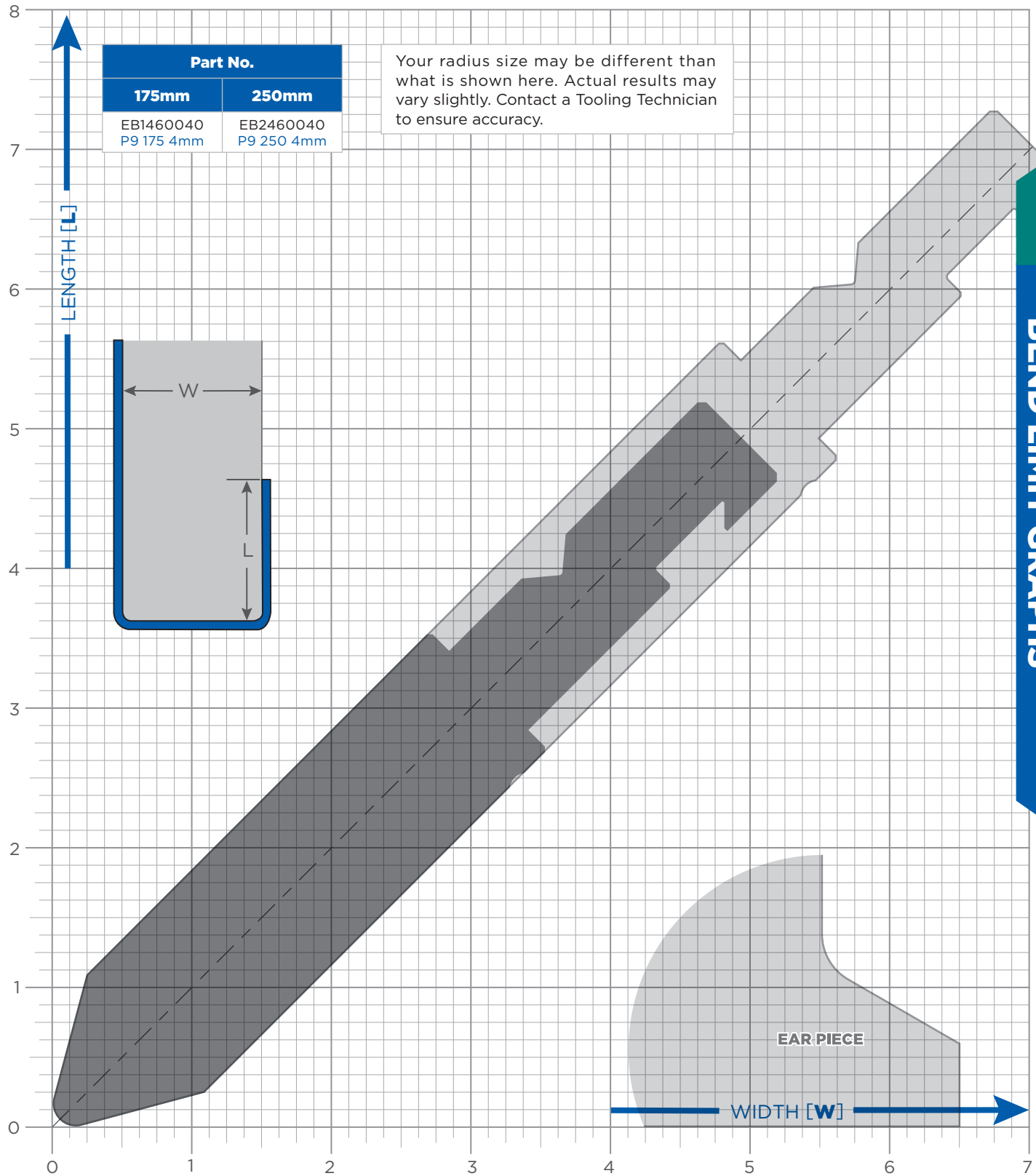

# V-SERIES BLACK (VSB) DIES — MODELS 1,2 & 2.5

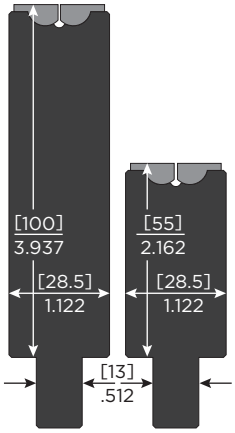


**MODEL 1**
**61100 61055**

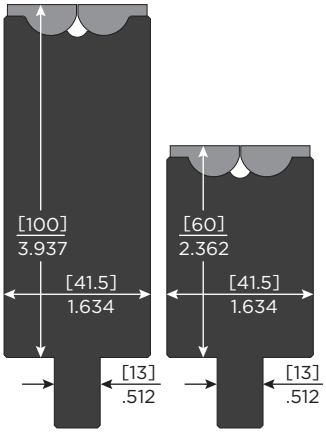


**MODEL 2**
**62100 62060**

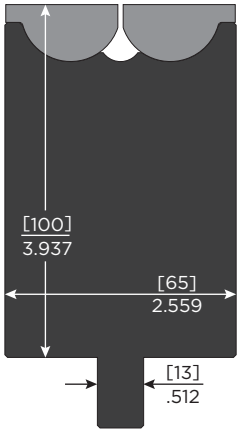


**MODEL 2.5**
**625100**

**Scan QR Code to Watch the Video**

| MODEL 1 | SOLID | | | | SECTIONAL | | X1 | | X2 | |
|---|---|---|---|---|---|---|---|---|---|---|
| Length | 250mm [9.842"] | | 500mm [19.685"] | | 550mm [21.654"] | | 275mm [10.826"] | | 275mm [10.826"] | |
| Height | 55mm | 100mm | 55mm | 100mm | 55mm | 100mm | 55mm | 100mm | 55mm | 100mm |
| Assembly Part No. | 61055-250 | 61100-250 | 61055-500 | 61100-500 | 61055-550 | 61100-550 | 61055X1 | 61100X1 | 61055X2 | 61100X2 |
| Spring | (20 qty.) 980683 | (20 qty.) 981031 | (40 qty.) 980683 | (40 qty.) 981031 | (44 qty.) 980683 | (44 qty.) 981031 | (22 qty.) 980683 | (22 qty.) 981031 | (22 qty.) 980683 | (22 qty.) 981031 |
| Weight | 6 lbs. | 10 lbs. | 11 lbs. | 20 lbs. | 13 lbs. | 22 lbs. | 6 lbs. | 11 lbs. | 6 lbs. | 11 lbs. |
| Price | | | | | | | | | | |
| Insert Part No. | — | | (4) 980872A | | 987158A & 987159A | | 987158A | | 987159A | |

| MODEL 2 | SOLID | | | | SECTIONAL | | X1 | | X2 | |
|---|---|---|---|---|---|---|---|---|---|---|
| Length | 250mm [9.842"] | | 500mm [19.685"] | | 550mm [21.654"] | | 275mm [10.826"] | | 275mm [10.826"] | |
| Height | 60mm | 100mm | 60mm | 100mm | 60mm | 100mm | 60mm | 100mm | 60mm | 100mm |
| Assembly Part No. | 62060-250 | 62100-250 | 62060-500 | 62100-500 | 62060-550 | 62100-550 | 62060X1 | 62100X1 | 62060X2 | 62100X2 |
| Spring | (20 qty.) 980682 | (20 qty.) 981032 | (40 qty.) 980682 | (40 qty.) 981032 | (44 qty.) 980682 | (44 qty.) 981032 | (22 qty.) 980682 | (22 qty.) 981032 | (22 qty.) 980682 | (22 qty.) 981032 |
| Weight | 9 lbs. | 14 lbs. | 15 lbs. | 25 lbs. | 17 lbs. | 29 lbs. | 8 lbs. | 14 lbs. | 8 lbs. | 14 lbs. |
| Price | | | | | | | | | | |
| Insert Part No. | — | | (4) 980948 | | 980949 & 980950 | | 987160 | | 987161 | |

| MODEL 2.5 | SOLID | | X1 | X2 |
|---|---|---|---|---|
| Length | 9.84" [250mm] | 19.68" [500mm] | 10.83" [275mm] | 10.83" [275mm] |
| Height | 100mm | 100mm | 100mm | 100mm |
| Assembly Part No. | 625100-250 | 625100-500 | 625100x1 | 625100x2 |
| Spring | (20 qty.) 981032 | (40 qty.) 981032 | (22 qty.) 981032 | (22 qty.) 981032 |
| Weight | 24 lbs. | 49 lbs. | 27 lbs. | 27 lbs. |
| Price | | | | |
| Insert Part No. | (2) 990646 | (4) 990646 | (2) 990644 | (2) 990645 |



Visit **wilsontool.com/MyAccount** for Drawings, Invoices, Tracking & More!

| Model | Material Thickness inch [mm] | Min. Outside Flange inch [mm] | Ton/Ft. | Min. Angle | Min. Outside Radius @ Min. Angle inch [mm] | Max. Outside Radius @ 90° inch [mm] | US Short Ton/Ft. | Metric Tons/M | kN/M |
|---|---|---|---|---|---|---|---|---|---|
| **V-SERIES BLACK (VSB) SPECIFICATIONS** | | | | | | | | | |
| 1 | .018 [.45] | .118 [3.0] | 1.8 | 34° | .125 [3.17] | .175 [4.45] | 38 | 112 | 1100 |
| | .020 [.50] | | 1.8 | | | | | | |
| | .024 [.60] | | 2 | | | | | | |
| | .032 [.80] | | 2.5 | | | | | | |
| | .035 [.90] | | 3.3 | | | | | | |
| | .040 [1.0] | .153 [3.9] | 4 | | | | | | |
| | .048 [1.2] | | 5.8 | | | | | | |
| | .059 [1.5] | .165 [4.2] | 9 | | | | | | |
| 2 | .075 [1.9] | .335 [8.5] | 7 | 42° | .216 [5.5] | .354 [9.0] | 57 | 168 | 1650 |
| | .105 [2.7] | .347 [8.8] | 13 | | | | | | |
| | .118 [3.0] | .366 [9.3] | 19 | | | | | | |
| | .126 [3.2] | | 22 | | | | | | |
| | .134 [3.4] | | 25 | 55° | .276 [7.9] | | | | |
| 2.5 | .079 [2.0] | .732 [18.6] | 4 | 46° | .447 [11.35] | .500 [12.7] | 84 | 250 | 2450 |
| | .157 [4.0] | | 16 | | .378 [9.6] | | | | |
| | .197 [5.0] | | 28 | 55° | .343 [8.71] | | | | |

| Model | Shoulder Radius inch [mm] | Desired Angle | Theoretical V inch [mm] | Center Line of Inserts inch [mm] |
|---|---|---|---|---|
| **V-OPENING AND SHOULDER RADIUS DIMENSIONS** | | | | |
| 1 | .043 [1.1] | 90° | .283 [7.2] | .315 [8] |
| | | 34° | .256 [6.5] | |
| 2 | .050 [1.3] | 90° | .547 [13.9] | .591 [15] |
| | | 42° | .524 [13.3] | |
| 2.5 | .079 [2.0] | 90° | 1.037 [26.3] | 1.102 [28] |
| | | 55° | 1.007 [25.6] | |

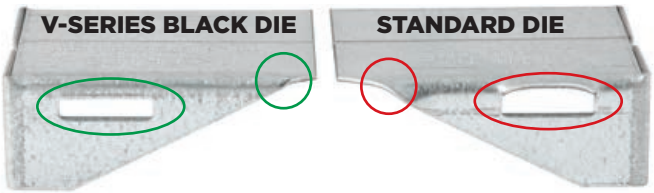


| DESCRIPTION | Part No. |
|---|---|
| **INSTALLATION TOOLS** | |
| Spring Installation Tool Kit | 981002 |
| Spring Extension Wire (short) | 981003 |
| Spring Extension Wire (long) | 981004 |

## V-Series Black (VSB) Standard Lengths — Models 1, 2 & 2.5

**Solid Length Available:** 19.68″ [500mm] and 9.84″ [250mm]

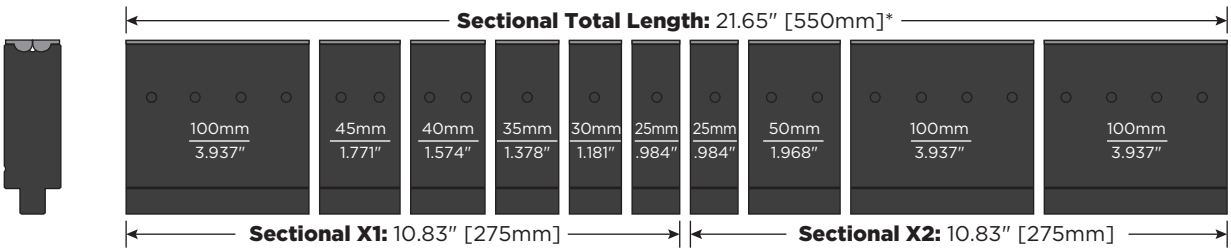


*550mm sectional length not available in Model 2.5

# V-SERIES BLACK (VSB) DIES — MODELS 3, 3.5 & 4

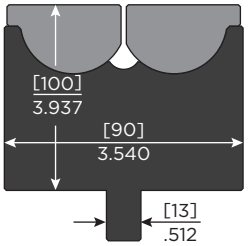


**MODEL 3**
**63070.2**

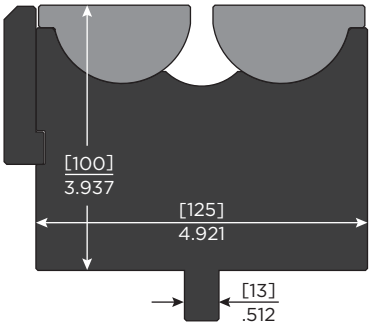


**MODEL 3.5**
**635100**

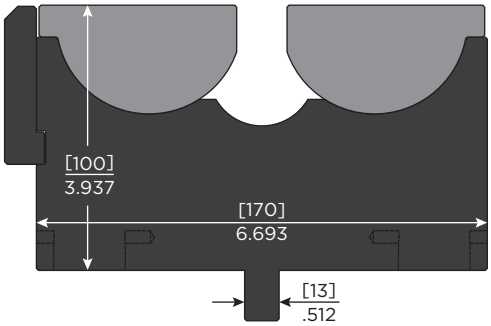


**MODEL 4**
**640100**

| MODEL 3 | SOLID | | SECTIONALIZED | |
|---|---|---|---|---|
| Length | 100mm [3.937″] | 250mm [9.842″] | 455mm [17.913″] | 255mm [10.039″] |
| Height | 70mm | 70mm | 70mm | 70mm |
| Assembly Part No. | 63070.2-100 | 63070.2-250 | 63070.2-455 | 63070.2X1 |
| Spring | (4 qty.) 987315 | (8 qty.) 987315 | (18 qty.) 987315 | (10 qty.) 987315 |
| Weight | 11 lbs. | 27 lbs. | 47 lbs. | 19 lbs. |
| Price | | | | |
| Insert Part No. | 987163 | 980959 | 987162 & 987163 | 987162 |

| MODEL 3.5 | SOLID | | X1 |
|---|---|---|---|
| Length | 3.94″ [100mm] | 9.84″ [250mm] | 10.04″ [255mm] |
| Height | 100mm | 100mm | 100mm |
| Assembly Part No. | 635100-100 | 635100-250 | 635100x1 |
| Spring | (4 qty.) 990656 | (10 qty.) 990656 | (10 qty.) 990656 |
| Weight | 20 lbs. | 51 lbs. | 52 lbs. |
| Price | | | |
| Insert Part No. | (2) 990650 | (2) 990651 | (2) 990648 |

| MODEL 4 | SOLID | | X1 |
|---|---|---|---|
| Length | 3.94″ [100mm] | 9.84″ [250mm] | 10.04″ [255mm] |
| Height | 100mm | 100mm | 100mm |
| Assembly Part No. | 640100-100 | 640100-250 | 640100x1 |
| Spring | (4 qty.) 990657 | (10 qty.) 990657 | (10 qty.) 990657 |
| Weight | 25 lbs. | 62 lbs. | 64 lbs. |
| Price | | | |
| Insert Part No. | (2) 990653 | (2) 990654 | (2) 990652 |





Visit **wilsontool.com/MyAccount** for Drawings, Invoices, Tracking & More!

| Model | Material Thickness inch [mm] | Min. Outside Flange inch [mm] | Ton/Ft. | Min. Angle | Min. Outside Radius @ Min. Angle inch [mm] | Max. Outside Radius @ 90° inch [mm] | US Short Ton/Ft. | Metric Tons/M | kN/M |
|---|---|---|---|---|---|---|---|---|---|
| **V-SERIES BLACK (VSB) SPECIFICATIONS** | | | | | | | | | |
| 3 | .157 [4.0] | .886 [22.5] | 12 | 65° | .453 [11.5] | .625 [15.9] | 84 | 250 | 2450 |
| | .187 [4.75] | | 26 | | | | | | |
| | .250 [6.35] | | 30 | | | | | | |
| 3.5 | .236 [6.0] | 1.476 [37.5] | 15 | 75° | .267 [6.78] | .945 [24] | 84 | 250 | 2450 |
| | .315 [8.0] | | 29 | | .346 [8.79] | | | | |
| | .394 [10.0] | | 49 | | .425 [10.8] | | | | |
| 4 | .236 [6.0] | 2.126 [54] | 9 | 78° | .267 [6.78] | 1.433 [36.4] | 101 | 300 | 2942 |
| | .315 [8.0] | | 17 | 76° | .346 [8.79] | | | | |
| | .472 [12.0] | | 44 | 73° | .503 [12.78] | | | | |

| Model | Shoulder Radius inch [mm] | Desired Angle | Theoretical V inch [mm] | Center Line of Inserts inch [mm] |
|---|---|---|---|---|
| **V-OPENING AND SHOULDER RADIUS DIMENSIONS** | | | | |
| 3 | .236 [6.0] | 90° | 1.299 [33.0] | 1.496 [38] |
| | | 65° | 1.236 [31.4] | |
| 3.5 | .138 [3.5] | 90° | 2.248 [57.1] | 2.362 [60] |
| | | 75° | 2.226 [56.6] | |
| 4 | .236 [6.0] | 90° | 3.151 [80.0] | 3.346 [85] |
| | | 73° | 3.108 [79.0] | |

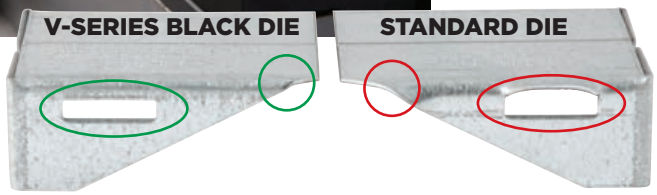


**Scan QR Code to Watch the Video**

| DESCRIPTION | Part No. |
|---|---|
| **INSTALLATION TOOLS** | |
| Spring Installation Tool Kit | 981002 |
| Spring Extension Wire (short) | 981003 |
| Spring Extension Wire (long) | 981004 |

## V-Series Black (VSB) Standard Lengths — Models 3, 3.5 & 4

**Solid Length Available:** 9.84″ [250mm] and 3.937″ [100mm]

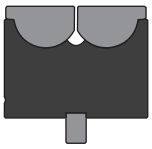

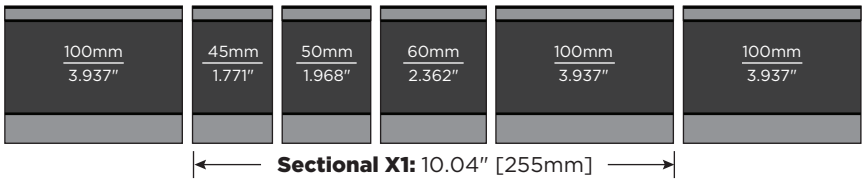

# V4 DIES — .157″

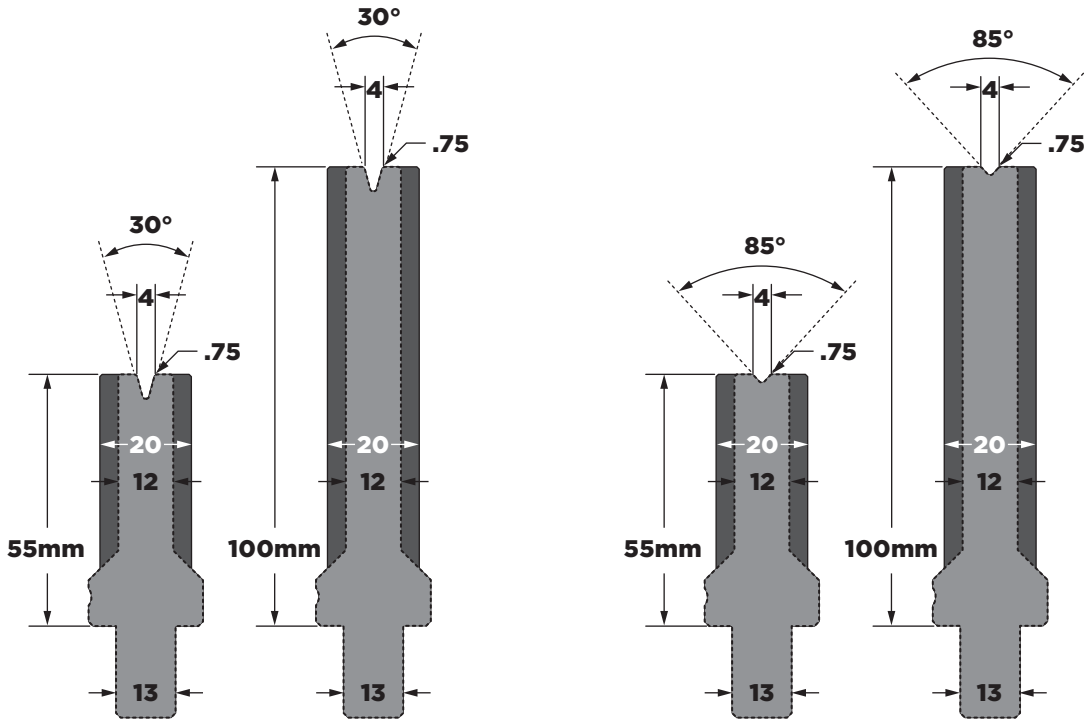


| Height mm [in.] | Part No. | Width mm [in.] | SR mm [in.] | kN/m | Max. Ton m [ft.] | 515 20.276″ [515mm] | Sectionalized 575x 22.638″ [575mm] | 550x 21.654″ [550mm] | 425x 16.732″ [425mm] |
|---|---|---|---|---|---|---|---|---|---|
| **V4 DIES — 30° ANGLE** | | | | | | | | | |
| 55 [2.165] | EB5030004 V4 30 H55 | 20 [.787] | .75 [.029] | 200 | 22 [15] | | | | |
| | | | | | **Approx. Gross Weight Unboxed:** | 12 lbs. | 14 lbs. | 13 lbs. | 10 lbs. |
| | EB5130004 V4S 30 H55 | 12 [.472] | .75 [.029] | 140 | 14 [4] | | | | |
| | | | | | **Approx. Gross Weight Unboxed:** | 10 lbs. | 11 lbs. | 10 lbs. | 8 lbs. |
| 100 [3.937] | EB6030004 V4 30 H100 | 20 [.787] | .75 [.029] | 200 | 22 [15] | | | | |
| | | | | | **Approx. Gross Weight Unboxed:** | 21 lbs. | 23 lbs. | 22 lbs. | 17 lbs. |
| | EB6130004 V4S 30 H100 | 12 [.472] | .75 [.029] | 140 | 14 [4] | | | | |
| | | | | | **Approx. Gross Weight Unboxed:** | 14 lbs. | 16 lbs. | 15 lbs. | 12 lbs. |
| **V4 DIES — 85° ANGLE** | | | | | | | | | |
| 55 [2.165] | EB5085004 V4 85 H55 | 20 [.787] | .75 [.029] | 600 | 61 [18] | | | | |
| | | | | | **Approx. Gross Weight Unboxed:** | 13 lbs. | 14 lbs. | 13 lbs. | 10 lbs. |
| | EB5185004 V4S 85 H55 | 12 [.472] | .75 [.029] | 400 | 41 [12] | | | | |
| | | | | | **Approx. Gross Weight Unboxed:** | 10 lbs. | 11 lbs. | 10 lbs. | 13 lbs. |
| 100 [3.937] | EB6085004 V4 85 H100 | 20 [.787] | .75 [.029] | 600 | 61 [18] | | | | |
| | | | | | **Approx. Gross Weight Unboxed:** | 21 lbs. | 23 lbs. | 22 lbs. | 17 lbs. |
| | EB6185004 V4S 85 H100 | 12 [.472] | .75 [.029] | 400 | 41 [12] | | | | |
| | | | | | **Approx. Gross Weight Unboxed:** | 14 lbs. | 16 lbs. | 15 lbs. | 12 lbs. |





Visit **wilsontool.com/MyAccount** for Drawings, Invoices, Tracking & More!

# V6 DIES — .236″

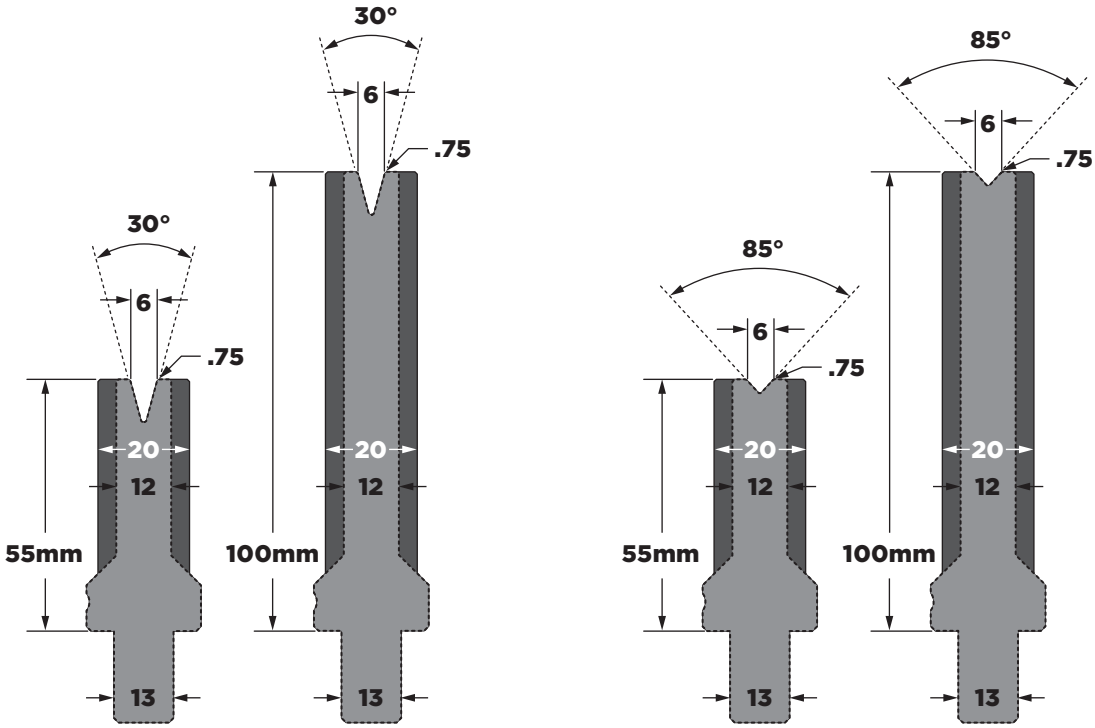


| Height mm [in.] | Part No. | Width mm [in.] | SR mm [in.] | kN/m | Max. Ton m [ft.] | 515 20.276″ [515mm] | Sectionalized 575x 22.638″ [575mm] | 550x 21.654″ [550mm] | 425x 16.732″ [425mm] |
|---|---|---|---|---|---|---|---|---|---|
| **V6 DIES — 30° ANGLE** | | | | | | | | | |
| 55 [2.165] | EB5030006 V6 30 H55 | 20 [.787] | .75 [.029] | 280 | 29 [10] | | | | |
| | **Approx. Gross Weight Unboxed:** | | | | | 12 lbs. | 14 lbs. | 13 lbs. | 10 lbs. |
| | EB5130006 V6S 30 H55 | 12 [.472] | .75 [.029] | 110 | 14 [5] | | | | |
| | **Approx. Gross Weight Unboxed:** | | | | | 9 lbs. | 10 lbs. | 10 lbs. | 8 lbs. |
| 100 [3.937] | EB6030006 V6 30 H100 | 20 [.787] | .75 [.029] | 280 | 29 [10] | | | | |
| | **Approx. Gross Weight Unboxed:** | | | | | 20 lbs. | 22 lbs. | 21 lbs. | 17 lbs. |
| | EB6130006 V6S 30 H100 | 12 [.472] | .75 [.029] | 110 | 14 [5] | | | | |
| | **Approx. Gross Weight Unboxed:** | | | | | 14 lbs. | 16 lbs. | 15 lbs. | 12 lbs. |
| **V6 DIES — 85° ANGLE** | | | | | | | | | |
| 55 [2.165] | EB5085006 V6 85 H55 | 20 [.787] | .75 [.029] | 800 | 82 [24] | | | | |
| | **Approx. Gross Weight Unboxed:** | | | | | 12 lbs. | 14 lbs. | 13 lbs. | 10 lbs. |
| | EB5185006 V6S 85 H55 | 12 [.472] | .75 [.029] | 400 | 41 [12] | | | | |
| | **Approx. Gross Weight Unboxed:** | | | | | 10 lbs. | 11 lbs. | 10 lbs. | 8 lbs. |
| 100 [3.937] | EB6085006 V6 85 H100 | 20 [.787] | .75 [.029] | 800 | 82 [24] | | | | |
| | **Approx. Gross Weight Unboxed:** | | | | | 20 lbs. | 23 lbs. | 22 lbs. | 17 lbs. |
| | EB6185006 V6S 85 H100 | 12 [.472] | .75 [.029] | 400 | 41 [12] | | | | |
| | **Approx. Gross Weight Unboxed:** | | | | | 14 lbs. | 16 lbs. | 15 lbs. | 12 lbs. |

# V8 DIES — .315″

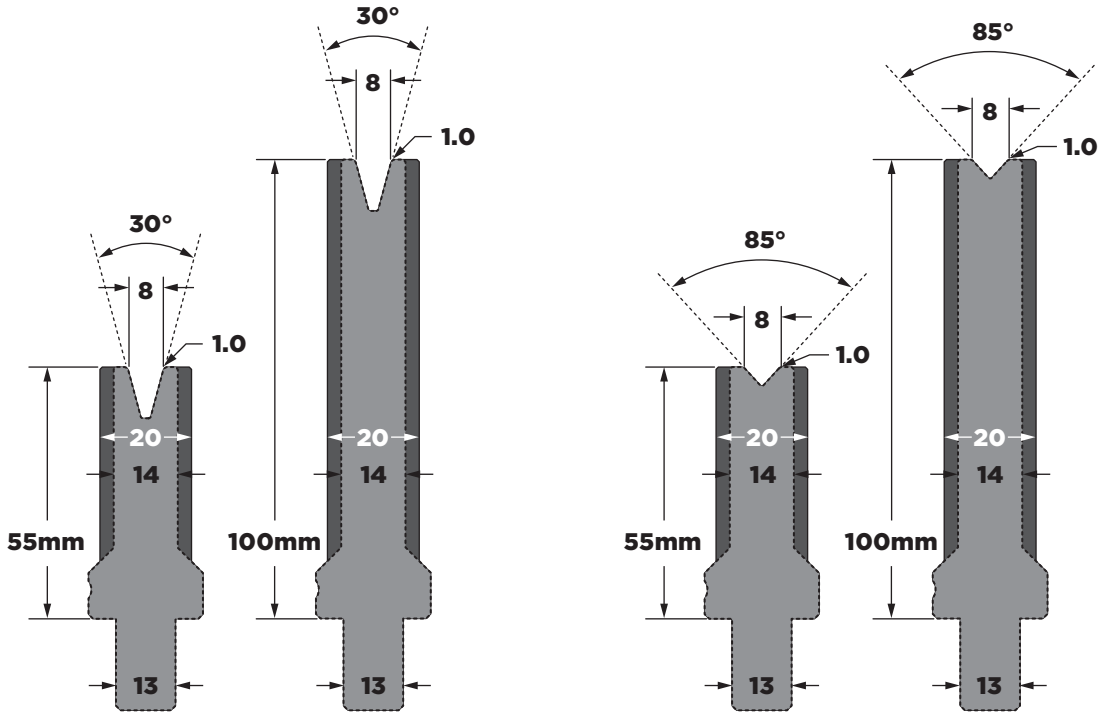


| Height mm [in.] | Part No. | Width mm [in.] | SR mm [in.] | kN/m | Max. Ton m [ft.] | 515 20.276″ [515mm] | Sectionalized 575x 22.638″ [575mm] | 550x 21.654″ [550mm] | 425x 16.732″ [425mm] |
|---|---|---|---|---|---|---|---|---|---|
| **V8 DIES — 30° ANGLE** | | | | | | | | | |
| 55 [2.165] | EB5030008 V8 30 H55 | 20 [.787] | 1.0 [.039] | 850 | 87 [26] | | | | |
| | **Approx. Gross Weight Unboxed:** | | | | | 12 lbs. | 14 lbs. | 13 lbs. | 10 lbs. |
| | EB5130008 V8S 30 H55 | 14 [.551] | 1.0 [.039] | 110 | 11 [3] | | | | |
| | **Approx. Gross Weight Unboxed:** | | | | | 9 lbs. | 10 lbs. | 10 lbs. | 8 lbs. |
| 100 [3.937] | EB6030008 V8 30 H100 | 20 [.787] | 1.0 [.039] | 850 | 87 [26] | | | | |
| | **Approx. Gross Weight Unboxed:** | | | | | 20 lbs. | 22 lbs. | 21 lbs. | 17 lbs. |
| | EB6130008 V8S 30 H100 | 14 [.551] | 1.0 [.039] | 110 | 14 [5] | | | | |
| | **Approx. Gross Weight Unboxed:** | | | | | 14 lbs. | 16 lbs. | 15 lbs. | 12 lbs. |
| **V8 DIES — 85° ANGLE** | | | | | | | | | |
| 55 [2.165] | EB5085008 V8 85 H55 | 20 [.787] | 1.0 [.039] | 850 | 87 [26] | | | | |
| | **Approx. Gross Weight Unboxed:** | | | | | 12 lbs. | 14 lbs. | 13 lbs. | 10 lbs. |
| | EB5185008 V8S 85 H55 | 14 [.551] | 1.0 [.039] | 800 | 82 [24] | | | | |
| | **Approx. Gross Weight Unboxed:** | | | | | 10 lbs. | 11 lbs. | 11 lbs. | 8 lbs. |
| 100 [3.937] | EB6085008 V8 85 H100 | 20 [.787] | 1.0 [.039] | 850 | 87 [26] | | | | |
| | **Approx. Gross Weight Unboxed:** | | | | | 20 lbs. | 23 lbs. | 22 lbs. | 17 lbs. |
| | EB6185008 V8S 85 H100 | 14 [.551] | 1.0 [.039] | 800 | 82 [24] | | | | |
| | **Approx. Gross Weight Unboxed:** | | | | | 16 lbs. | 18 lbs. | 17 lbs. | 13 lbs. |





Visit **wilsontool.com/MyAccount** for Drawings, Invoices, Tracking & More!

# V10 DIES — .394″

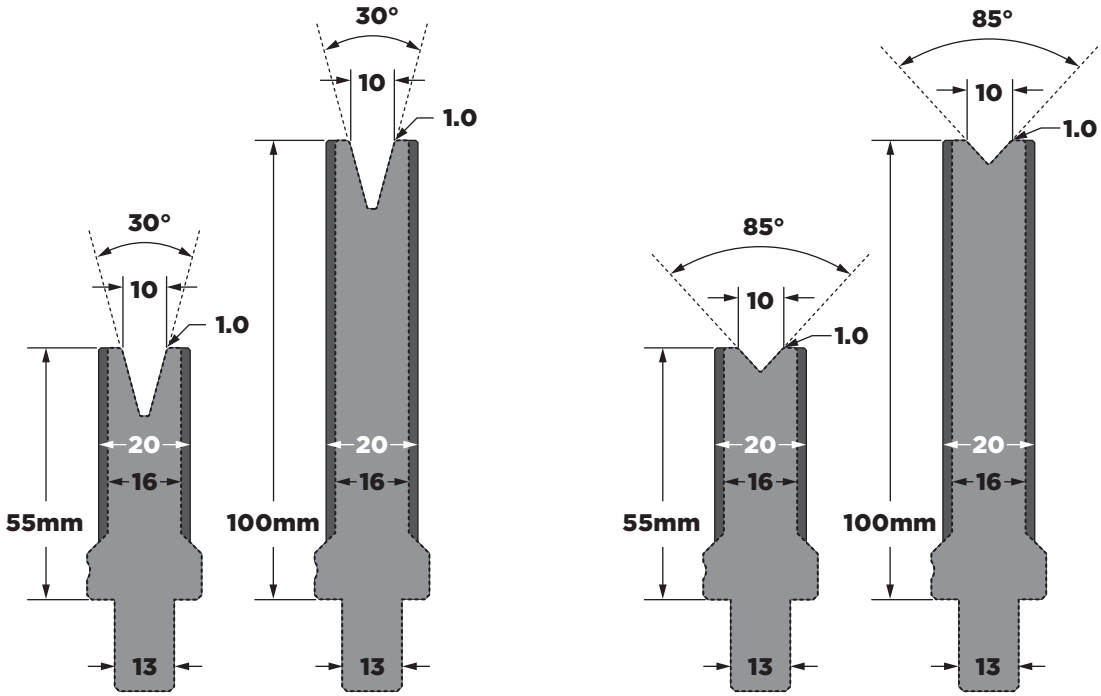


| Height mm [in.] | Part No. | Width mm [in.] | SR mm [in.] | kN/m | Max. Ton m [ft.] | 515 20.276″ [515mm] | Sectionalized 575x 22.638″ [575mm] | 550x 21.654″ [550mm] | 425x 16.732″ [425mm] |
|---|---|---|---|---|---|---|---|---|---|
| **V10 DIES — 30° ANGLE** | | | | | | | | | |
| 55 [2.165] | EB5030010 V10 30 H55 | 20 [.787] | 1.0 [.039] | 200 | 20 [6] | | | | |
| | **Approx. Gross Weight Unboxed:** | | | | | 12 lbs. | 13 lbs. | 12 lbs. | 10 lbs. |
| | EB5130010 V10S 30 H55 | 16 [.685] | 1.0 [.039] | 100 | 10 [3] | | | | |
| | **Approx. Gross Weight Unboxed:** | | | | | 10 lbs. | 11 lbs. | 11 lbs. | 8 lbs. |
| 100 [3.937] | EB6030010 V10 30 H100 | 20 [.787] | 1.0 [.039] | 200 | 20 [6] | | | | |
| | **Approx. Gross Weight Unboxed:** | | | | | 20 lbs. | 22 lbs. | 21 lbs. | 16 lbs. |
| | EB6130010 V10S 30 H100 | 16 [.685] | 1.0 [.039] | 100 | 10 [3] | | | | |
| | **Approx. Gross Weight Unboxed:** | | | | | 17 lbs. | 19 lbs. | 18 lbs. | 14 lbs. |
| **V10 DIES — 85° ANGLE** | | | | | | | | | |
| 55 [2.165] | EB5085010 V01 85 H55 | 20 [.787] | 1.0 [.039] | 800 | 82 [24] | | | | |
| | **Approx. Gross Weight Unboxed:** | | | | | 12 lbs. | 14 lbs. | 13 lbs. | 10 lbs. |
| | EB5185010 V10S 85 H55 | 16 [.685] | 1.0 [.039] | 700 | 71 [21] | | | | |
| | **Approx. Gross Weight Unboxed:** | | | | | 11 lbs. | 12 lbs. | 11 lbs. | 9 lbs. |
| 100 [3.937] | EB6085010 V10 85 H100 | 20 [.787] | 1.0 [.039] | 800 | 82 [24] | | | | |
| | **Approx. Gross Weight Unboxed:** | | | | | 20 lbs. | 23 lbs. | 22 lbs. | 17 lbs. |
| | EB6185010 V10S 85 H100 | 16 [.685] | 1.0 [.039] | 700 | 71 [21] | | | | |
| | **Approx. Gross Weight Unboxed:** | | | | | 17 lbs. | 19 lbs. | 18 lbs. | 14 lbs. |

# V12 DIES — .472″

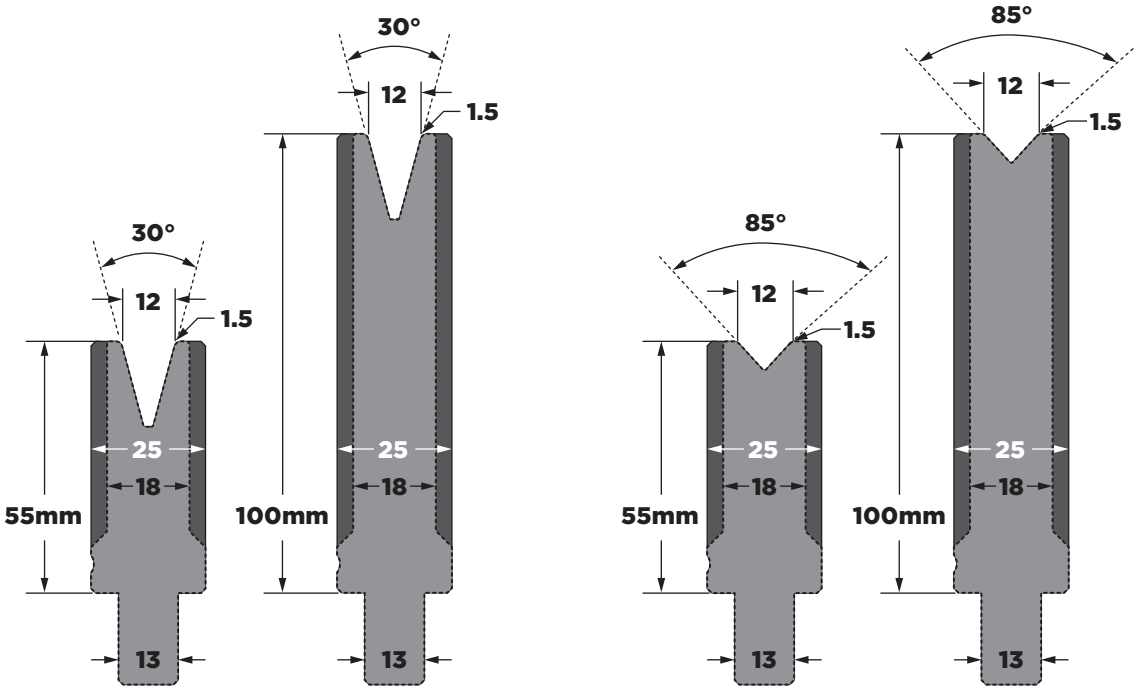


| Height mm [in.] | Part No. | Width mm [in.] | SR mm [in.] | kN/m | Max. Ton m [ft.] | 515 20.276″ [515mm] | Sectionalized 575x 22.638″ [575mm] | 550x 21.654″ [550mm] | 425x 16.732″ [425mm] |
|---|---|---|---|---|---|---|---|---|---|
| **V12 DIES — 30° ANGLE** | | | | | | | | | |
| 55 [2.165] | EB5030012 V12 30 H55 | 25 [.984] | 1.5 [.060] | 250 | 26 [8] | | | | |
| | **Approx. Gross Weight Unboxed:** | | | | | 13 lbs. | 15 lbs. | 14 lbs. | 11 lbs. |
| | EB5130012 V12S 30 H55 | 18 [.709] | 1.5 [.060] | 100 | 10 [3] | | | | |
| | **Approx. Gross Weight Unboxed:** | | | | | 11 lbs. | 12 lbs. | 11 lbs. | 9 lbs. |
| 100 [3.937] | EB6030012 V12 30 H100 | 25 [.984] | 1.5 [.060] | 250 | 26 [8] | | | | |
| | **Approx. Gross Weight Unboxed:** | | | | | 23 lbs. | 26 lbs. | 25 lbs. | 19 lbs. |
| | EB6130012 V12S 30 H100 | 18 [.709] | 1.5 [.060] | 100 | 10 [3] | | | | |
| | **Approx. Gross Weight Unboxed:** | | | | | 18 lbs. | 15 lbs. | 19 lbs. | 15 lbs. |
| **V12 DIES — 85° ANGLE** | | | | | | | | | |
| 55 [2.165] | EB5085012 V12 85 H55 | 25 [.984] | 1.5 [.060] | 900 | 92 [28] | | | | |
| | **Approx. Gross Weight Unboxed:** | | | | | 14 lbs. | 16 lbs. | 15 lbs. | 12 lbs. |
| | EB5185012 V12S 85 H55 | 18 [.709] | 1.5 [.060] | 700 | 71 [21] | | | | |
| | **Approx. Gross Weight Unboxed:** | | | | | 11 lbs. | 13 lbs. | 12 lbs. | 9 lbs. |
| 100 [3.937] | EB6085012 V12 85 H100 | 25 [.984] | 1.5 [.060] | 900 | 92 [28] | | | | |
| | **Approx. Gross Weight Unboxed:** | | | | | 24 lbs. | 27 lbs. | 26 lbs. | 20 lbs. |
| | EB6185012 V12S 85 H100 | 18 [.709] | 1.5 [.060] | 900 | 92 [28] | | | | |
| | **Approx. Gross Weight Unboxed:** | | | | | 19 lbs. | 21 lbs. | 20 lbs. | 15 lbs. |





Visit **wilsontool.com/MyAccount** for Drawings, Invoices, Tracking & More!

# V16 DIES — .630″

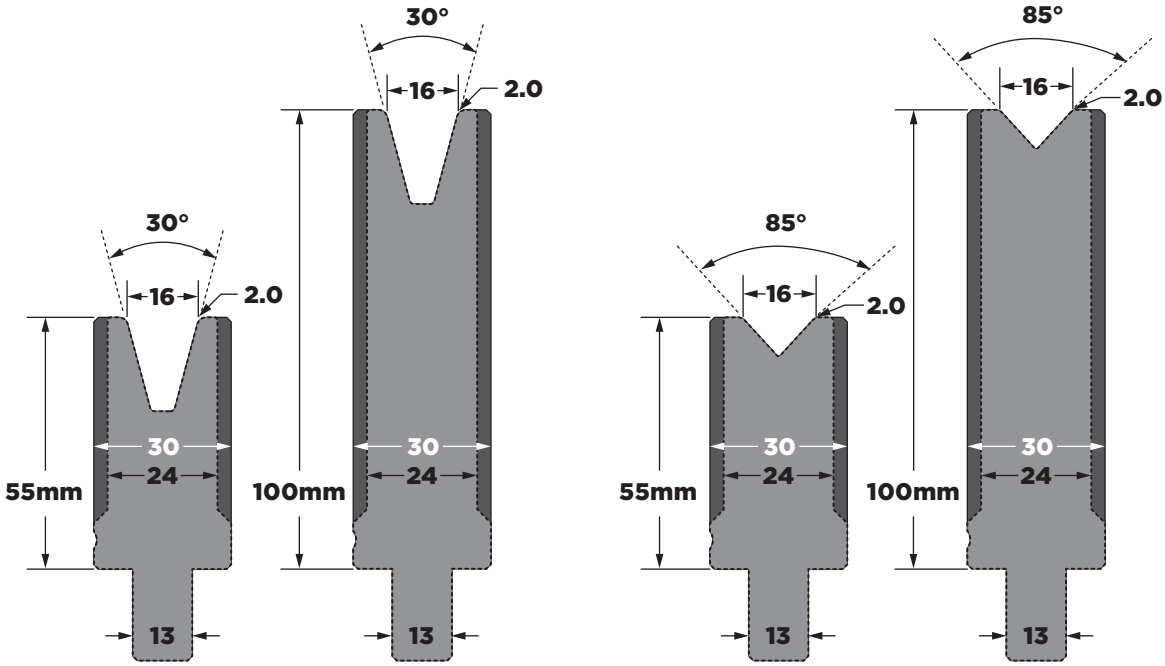


| Height mm [in.] | Part No. | Width mm [in.] | SR mm [in.] | kN/m | Max. Ton m [ft.] | 515 20.276″ [515mm] | Sectionalized 575x 22.638″ [575mm] | 550x 21.654″ [550mm] | 425x 16.732″ [425mm] |
|---|---|---|---|---|---|---|---|---|---|
| **V16 DIES — 30° ANGLE** | | | | | | | | | |
| 55 [2.165] | EB5030016 V16 30 H55 | 30 [1.181] | 2.0 [.079] | 850 | 87 [26] | | | | |
| | **Approx. Gross Weight Unboxed:** | | | | | 15 lbs. | 17 lbs. | 16 lbs. | 12 lbs. |
| | EB5130016 V16S 30 H55 | 24 [.945] | 2.0 [.079] | 150 | 15 [5] | | | | |
| | **Approx. Gross Weight Unboxed:** | | | | | 13 lbs. | 14 lbs. | 13 lbs. | 10 lbs. |
| 100 [3.937] | EB6030016 V16 30 H100 | 30 [1.181] | 2.0 [.079] | 850 | 87 [26] | | | | |
| | **Approx. Gross Weight Unboxed:** | | | | | 27 lbs. | 30 lbs. | 29 lbs. | 22 lbs. |
| | EB6130016 V16S 30 H100 | 24 [.945] | 2.0 [.079] | 150 | 15 [5] | | | | |
| | **Approx. Gross Weight Unboxed:** | | | | | 22 lbs. | 25 lbs. | 24 lbs. | 18 lbs. |
| **V16 DIES — 85° ANGLE** | | | | | | | | | |
| 55 [2.165] | EB5085016 V16 85 H55 | 30 [1.181] | 2.0 [.079] | 1,200 | 122 [37] | | | | |
| | **Approx. Gross Weight Unboxed:** | | | | | 16 lbs. | 18 lbs. | 17 lbs. | 13 lbs. |
| | EB5185016 V16S 85 H55 | 24 [.945] | 2.0 [.079] | 1,000 | 102 [31] | | | | |
| | **Approx. Gross Weight Unboxed:** | | | | | 15 lbs. | 16 lbs. | 15 lbs. | 11 lbs. |
| 100 [3.937] | EB6085016 V16 85 H100 | 30 [1.181] | 2.0 [.079] | 1,200 | 122 [37] | | | | |
| | **Approx. Gross Weight Unboxed:** | | | | | 28 lbs. | 31 lbs. | 30 lbs. | 23 lbs. |
| | EB6185016 V16S 85 H100 | 24 [.945] | 2.0 [.079] | 1,200 | 122 [37] | | | | |
| | **Approx. Gross Weight Unboxed:** | | | | | 23 lbs. | 26 lbs. | 25 lbs. | 19 lbs. |

# V20 DIES — .787″

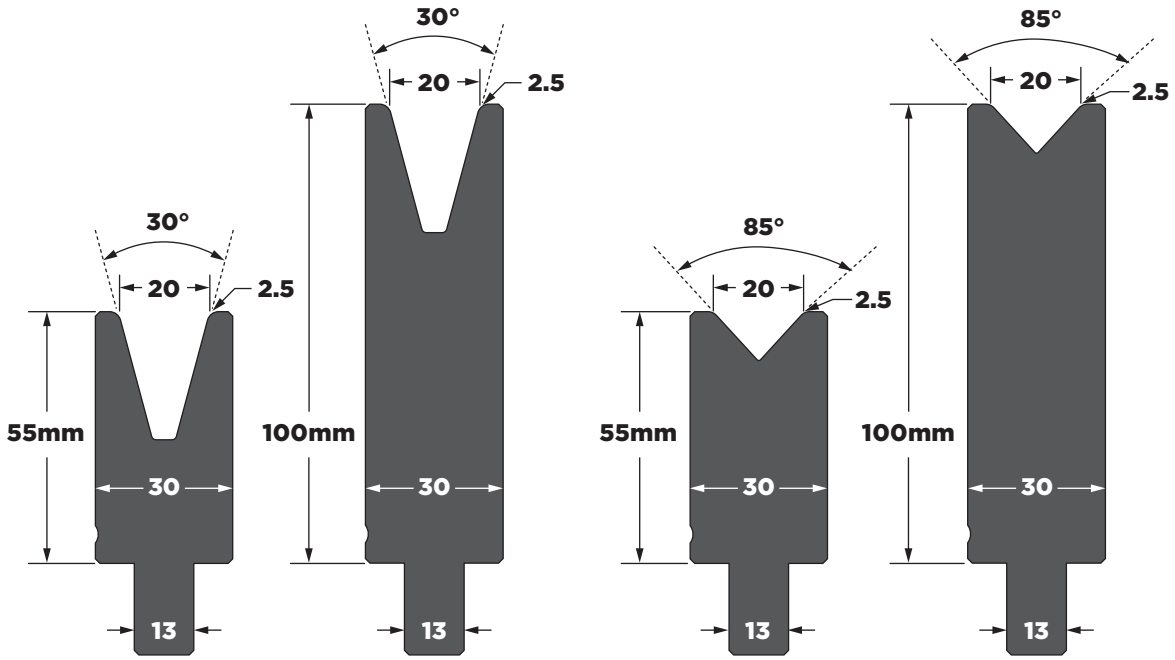


| Height mm [in.] | Part No. | Width mm [in.] | SR mm [in.] | kN/m | Max. Ton m [ft.] | 515 20.276″ [515mm] | Sectionalized 575x 22.638″ [575mm] | Sectionalized 550x 21.654″ [550mm] | Sectionalized 425x 16.732″ [425mm] |
|---|---|---|---|---|---|---|---|---|---|
| **V20 DIES — 30° ANGLE** | | | | | | | | | |
| 55 [2.165] | EB5030020 V20 30 H55 | 30 [1.181] | 2.5 [.098] | 180 | 18 [5] | | | | |
| | **Approx. Gross Weight Unboxed:** | | | | | 14 lbs. | 15 lbs. | 14 lbs. | 11 lbs. |
| 100 [3.937] | EB6030020 V20 30 H100 | 30 [1.181] | 2.5 [.098] | 180 | 18 [5] | | | | |
| | **Approx. Gross Weight Unboxed:** | | | | | 26 lbs. | 29 lbs. | 27 lbs. | 21 lbs. |
| **V20 DIES — 85° ANGLE** | | | | | | | | | |
| 55 [2.165] | EB5085020 V20 85 H55 | 30 [1.181] | 2.5 [.098] | 1,400 | 143 [43] | | | | |
| | **Approx. Gross Weight Unboxed:** | | | | | 16 lbs. | 18 lbs. | 17 lbs. | 13 lbs. |
| 100 [3.937] | EB6085020 V20 85 H100 | 30 [1.181] | 2.5 [.098] | 1,400 | 143 [43] | | | | |
| | **Approx. Gross Weight Unboxed:** | | | | | 28 lbs. | 31 lbs. | 30 lbs. | 23 lbs. |





Visit **wilsontool.com/MyAccount** for Drawings, Invoices, Tracking & More!

# V24 DIES — .945″

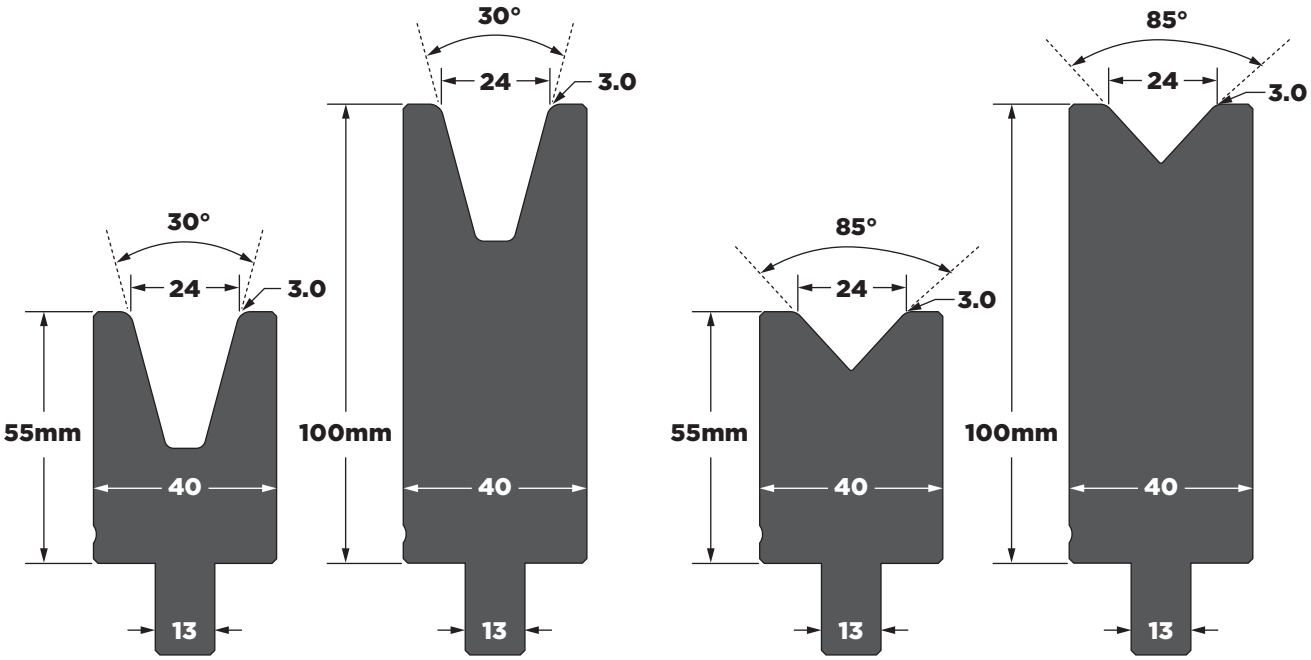


| Height mm [in.] | Part No. | Width mm [in.] | SR mm [in.] | kN/m | Max. Ton m [ft.] | 515 20.276″ [515mm] | Sectionalized 575x 22.638″ [575mm] | 550x 21.654″ [550mm] | 425x 16.732″ [425mm] |
|---|---|---|---|---|---|---|---|---|---|
| **V24 DIES — 30° ANGLE** | | | | | | | | | |
| 55 [2.165] | EB5030024 V24 30 H55 | 40 [1.575] | 3.0 [.118] | 385 | 39 [12] | | | | |
| | **Approx. Gross Weight Unboxed:** | | | | | 17 lbs. | 19 lbs. | 19 lbs. | 14 lbs. |
| 100 [3.937] | EB6030024 V24 30 H100 | 40 [1.575] | 3.0 [.118] | 385 | 39 [12] | | | | |
| | **Approx. Gross Weight Unboxed:** | | | | | 33 lbs. | 37 lbs. | 36 lbs. | 28 lbs. |
| **V24 DIES — 85° ANGLE** | | | | | | | | | |
| 55 [2.165] | EB5085024 V24 85 H55 | 40 [1.575] | 3.0 [.118] | 1,700 | 173 [52] | | | | |
| | **Approx. Gross Weight Unboxed:** | | | | | 20 lbs. | 23 lbs. | 22 lbs. | 17 lbs. |
| 100 [3.937] | EB6085024 V24 85 H100 | 40 [1.575] | 3.0 [.118] | 1,700 | 173 [52] | | | | |
| | **Approx. Gross Weight Unboxed:** | | | | | 36 lbs. | 40 lbs. | 39 lbs. | 30 lbs. |

# V32 DIES — 1.26″

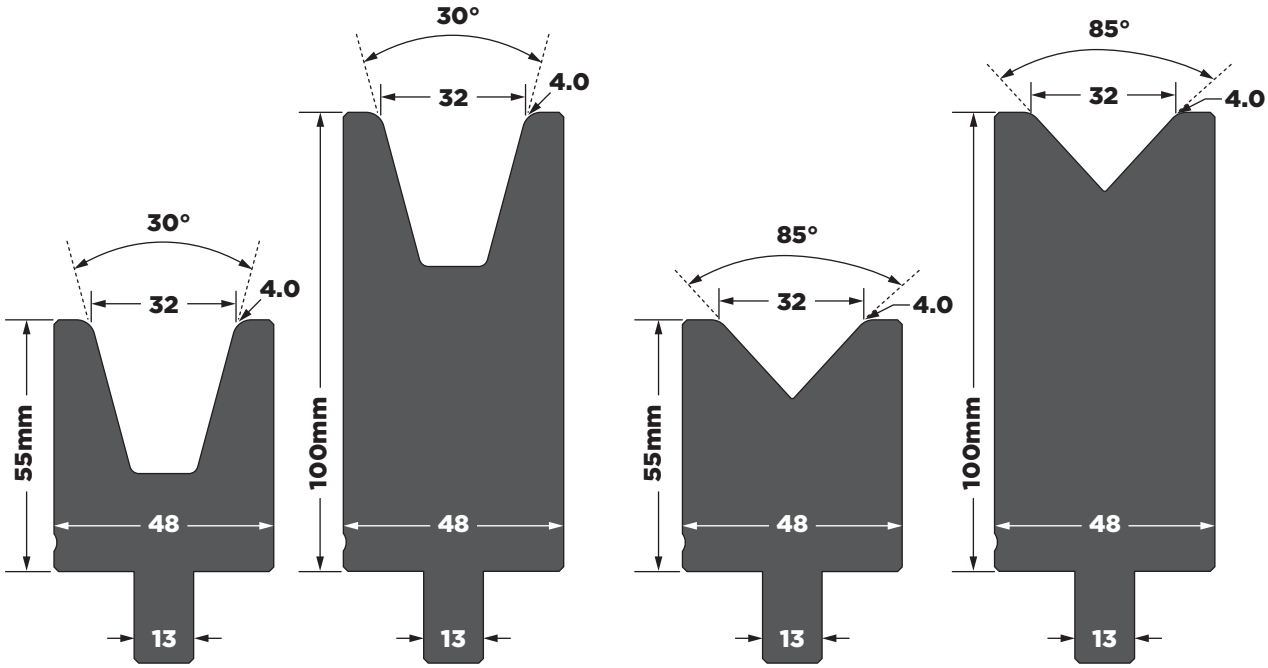


| Height mm [in.] | Part No. | Width mm [in.] | SR mm [in.] | kN/m | Max. Ton m [ft.] | 515 20.276″ [515mm] | Sectionalized 575x 22.638″ [575mm] | Sectionalized 550x 21.654″ [550mm] | Sectionalized 425x 16.732″ [425mm] |
|---|---|---|---|---|---|---|---|---|---|
| **V32 DIES — 30° ANGLE** | | | | | | | | | |
| 55 [2.165] | EB5030032 V32 30 H55 | 48 [1.899] | 4.0 [.157] | 340 | 35 [11] | | | | |
| | **Approx. Gross Weight Unboxed:** | | | | | 19 lbs. | 21 lbs. | 20 lbs. | 15 lbs. |
| 100 [3.937] | EB6030032 V32 30 H100 | 48 [1.899] | 4.0 [.157] | 340 | 35 [11] | | | | |
| | **Approx. Gross Weight Unboxed:** | | | | | 38 lbs. | 42 lbs. | 42 lbs. | 31 lbs. |
| **V32 DIES — 85° ANGLE** | | | | | | | | | |
| 55 [2.165] | EB5085032 V32 85 H55 | 48 [1.899] | 4.0 [.157] | 2,500 | 255 [77] | | | | |
| | **Approx. Gross Weight Unboxed:** | | | | | 23 lbs. | 26 lbs. | 25 lbs. | 19 lbs. |
| 100 [3.937] | EB6085032 V32 85 H100 | 48 [1.899] | 4.0 [.157] | 2,500 | 255 [77] | | | | |
| | **Approx. Gross Weight Unboxed:** | | | | | 42 lbs. | 47 lbs. | 45 lbs. | 35 lbs. |





Visit **wilsontool.com/MyAccount** for Drawings, Invoices, Tracking & More!

# V40 DIES — 1.575″

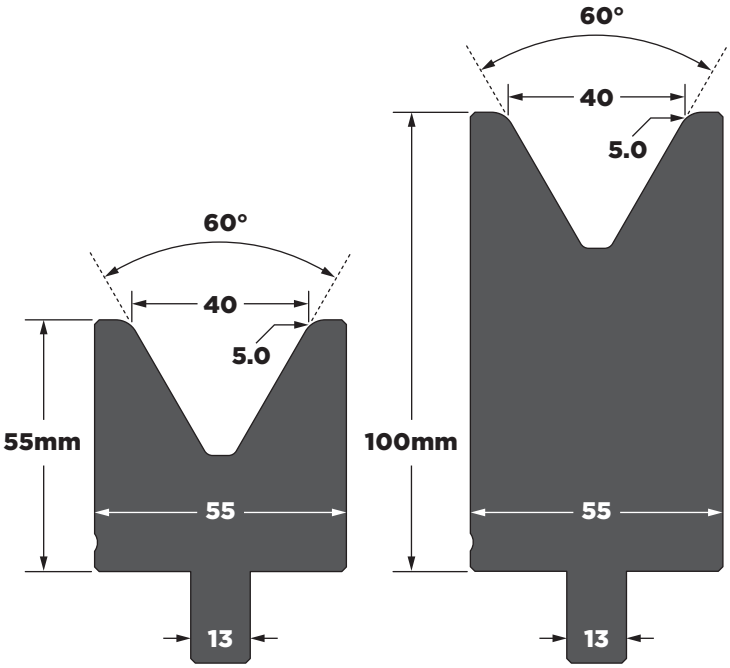


| Height mm [in.] | Part No. | Width mm [in.] | SR mm [in.] | kN/m | Max. Ton m [ft.] | 515 20.276″ [515mm] | Sectionalized 575x 22.638″ [575mm] | 550x 21.654″ [550mm] | 425x 16.732″ [425mm] |
|---|---|---|---|---|---|---|---|---|---|
| **V40 DIES — 60° ANGLE** | | | | | | | | | |
| 55 [2.165] | EB5060040 V40 60 H55 | 55 [2.165] | 5.0 [.197] | 1,800 | 184 [55] | | | | |
| | **Approx. Gross Weight Unboxed:** | | | | | 23 lbs. | 26 lbs. | 25 lbs. | 19 lbs. |
| 100 [3.937] | EB6060040 V40 60 H100 | 55 [2.165] | 5.0 [.197] | 2,000 | 204 [61] | | | | |
| | **Approx. Gross Weight Unboxed:** | | | | | 45 lbs. | 50 lbs. | 48 lbs. | 37 lbs. |

# V50 DIES — 1.969″

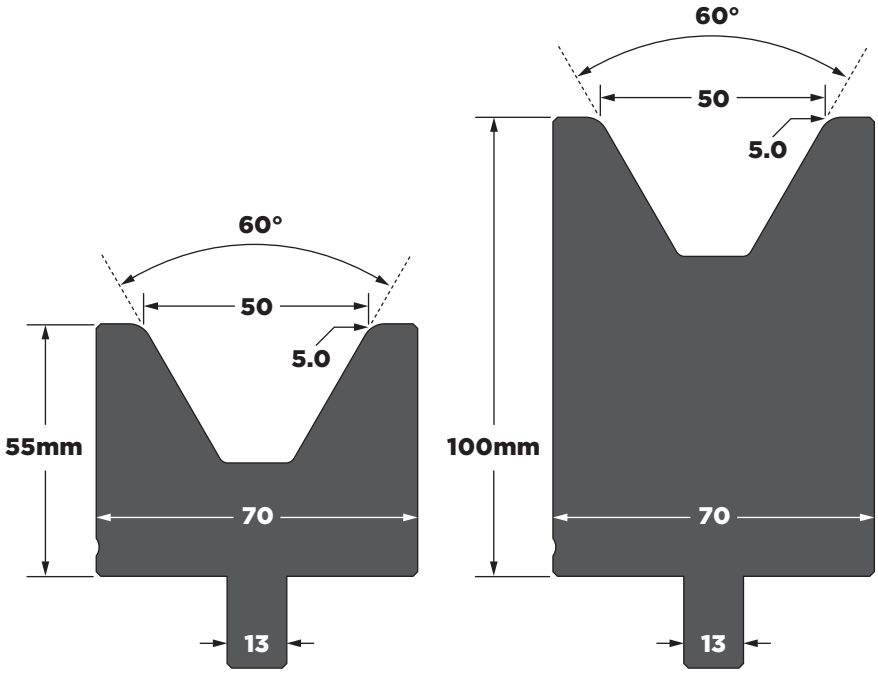


| Height mm [in.] | Part No. | Width mm [in.] | SR mm [in.] | kN/m | Max. Ton m [ft.] | 515 20.276″ [515mm] | Sectionalized 575x 22.638″ [575mm] | Sectionalized 550x 21.654″ [550mm] | Sectionalized 425x 16.732″ [425mm] |
|---|---|---|---|---|---|---|---|---|---|
| **V50 DIES — 60° ANGLE** | | | | | | | | | |
| 55 [2.165] | EB5060050 V50 60 H55 | 70 [2.756] | 5.0 [.197] | 1,800 | 184 [55] | | | | |
| | **Approx. Gross Weight Unboxed:** | | | | | 28 lbs. | 31 lbs. | 29 lbs. | 24 lbs. |
| 100 [3.937] | EB6060050 V50 60 H100 | 70 [2.756] | 5.0 [.197] | 2,000 | 204 [61] | | | | |
| | **Approx. Gross Weight Unboxed:** | | | | | 55 lbs. | 62 lbs. | 59 lbs. | 46 lbs. |





Visit **wilsontool.com/MyAccount** for Drawings, Invoices, Tracking & More!

# V60 DIES — 2.362″

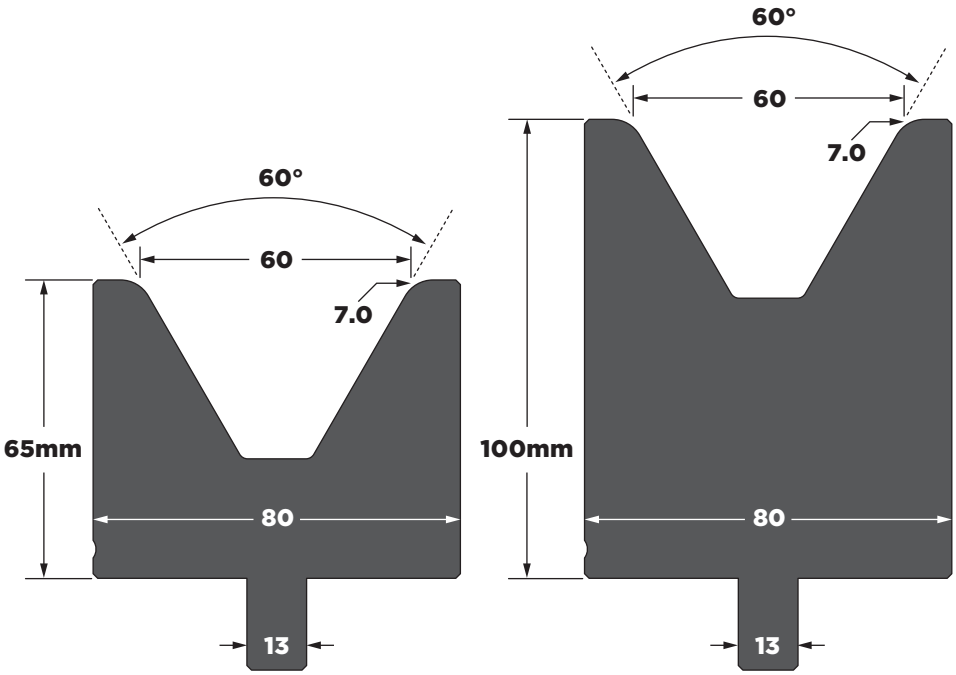


| Height mm [in.] | Part No. | Width mm [in.] | SR mm [in.] | kN/m | Max. Ton m [ft.] | 515 20.276″ [515mm] | Sectionalized 575x 22.638″ [575mm] | 550x 21.654″ [550mm] | 425x 16.732″ [425mm] |
|---|---|---|---|---|---|---|---|---|---|
| **V60 DIES — 60° ANGLE** | | | | | | | | | |
| 65 [2.362] | EB5060060 V60 60 H65 | 80 [3.15] | 7.0 [.276] | 1,600 | 163 [49] | | | | |
| | **Approx. Gross Weight Unboxed:** | | | | | 35 lbs. | 39 lbs. | 38 lbs. | 29 lbs. |
| 100 [3.937] | EB6060060 V60 60 H100 | 80 [3.15] | 7.0 [.276] | 1,600 | 163 [49] | | | | |
| | **Approx. Gross Weight Unboxed:** | | | | | 60 lbs. | 67 lbs. | 64 lbs. | 49 lbs. |

# V80 DIES — 3.15″

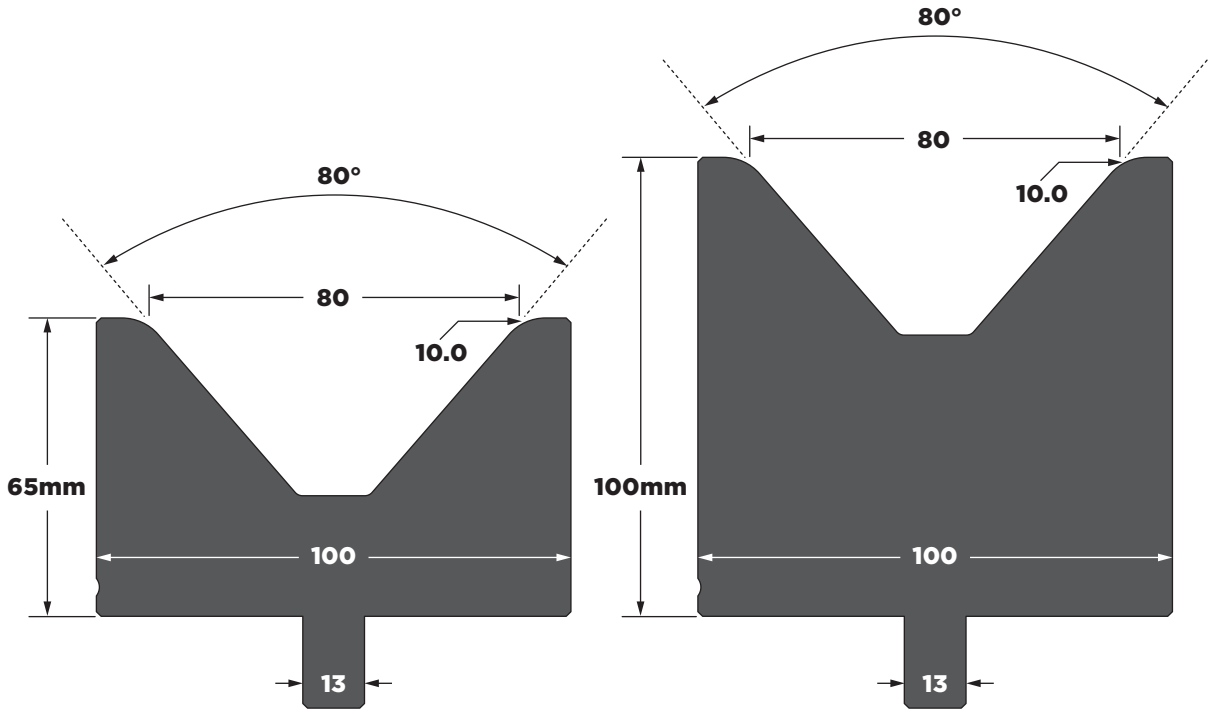


| Height mm [in.] | Part No. | Width mm [in.] | SR mm [in.] | kN/m | Max. Ton m [ft.] | 515 20.276″ [515mm] | Sectionalized 575x 22.638″ [575mm] | Sectionalized 550x 21.654″ [550mm] | Sectionalized 425x 16.732″ [425mm] |
|---|---|---|---|---|---|---|---|---|---|
| **V80 DIES — 80° ANGLE** | | | | | | | | | |
| 65 [2.362] | EB5080080 V80 60 H65 | 100 [3.937] | 10.0 [.394] | 1,600 | 163 [49] | | | | |
| | **Approx. Gross Weight Unboxed:** | | | | | 43 lbs. | 48 lbs. | 46 lbs. | 36 lbs. |
| 100 [3.937] | EB6080080 V80 60 H100 | 100 [3.937] | 10.0 [.394] | 2,800 | 286 [86] | | | | |
| | **Approx. Gross Weight Unboxed:** | | | | | 74 lbs. | 83 lbs. | 79 lbs. | 61 lbs. |





Visit **wilsontool.com/MyAccount** for Drawings, Invoices, Tracking & More!

# V100 DIES — 3.937″

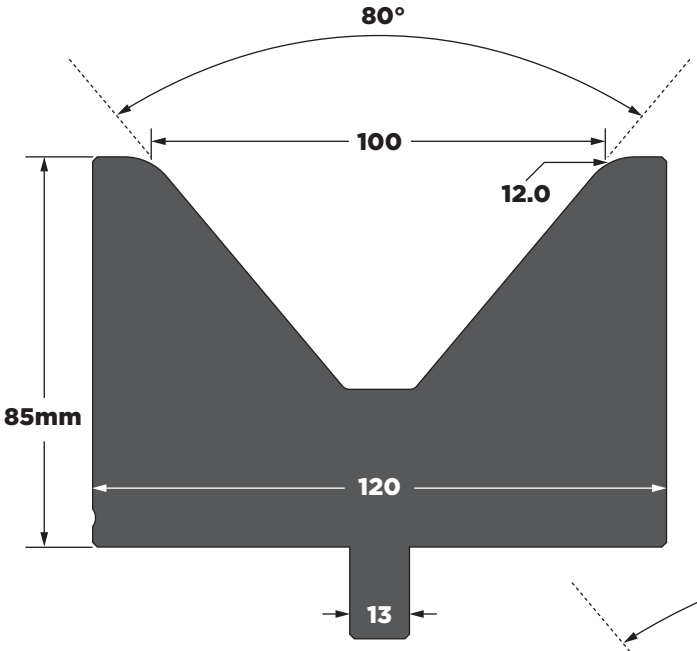


# V120 DIES — 4.724″

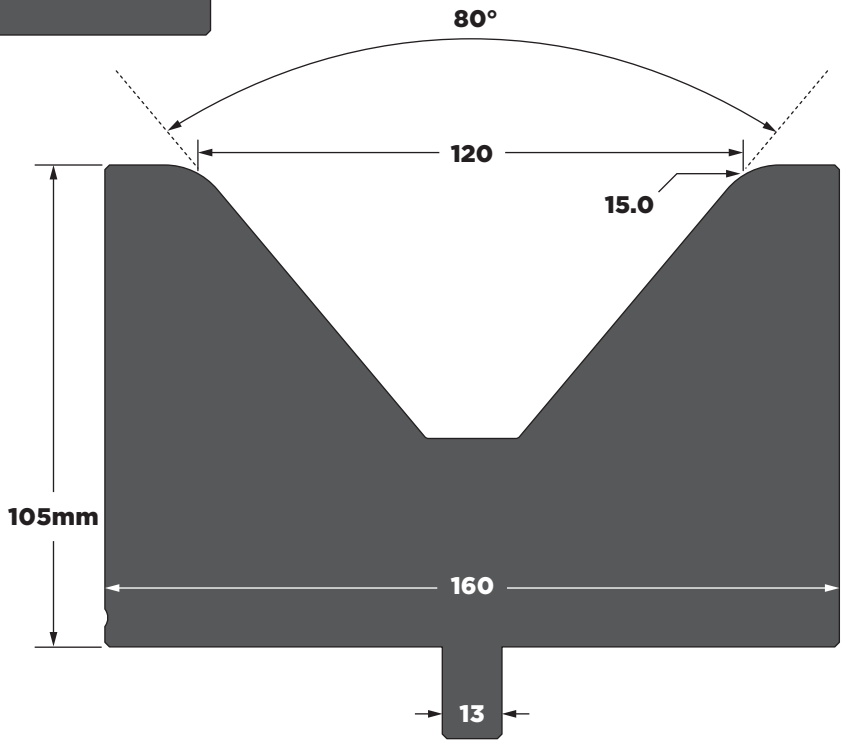


| Height mm [in.] | Part No. | Width mm [in.] | SR mm [in.] | kN/m | Max. Ton m [ft.] | 515 20.276″ [515mm] | Sectionalized 575x 22.638″ [575mm] | Sectionalized 550x 21.654″ [550mm] | Sectionalized 425x 16.732″ [425mm] |
|---|---|---|---|---|---|---|---|---|---|
| **V100 DIES — 80° ANGLE** | | | | | | | | | |
| 85 [3.346] | EB5080100 V100 80 H85 | 120 [4.724] | 12.0 [.472] | 2,000 | 204 [61] | | | | |
| | **Approx. Gross Weight Unboxed:** | | | | | 70 lbs. | 78 lbs. | 75 lbs. | 58 lbs. |
| **V120 DIES — 80° ANGLE** | | | | | | | | | |
| 105 [4.134] | EB5080120 V120 80 H105 | 160 [6.850] | 15.0 [.591] | 2,400 | 245 [74] | | | | |
| | **Approx. Gross Weight Unboxed:** | | | | | 114 lbs. | 127 lbs. | 121 lbs. | 94 lbs. |

# 30° HEMMING PUNCHES — P900

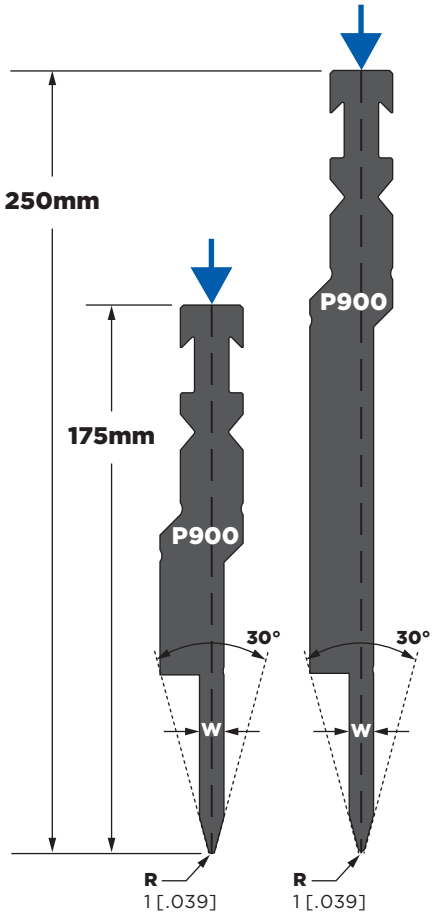


Indicates how tonnage is applied to punches

| H Height mm [in.] | Part No. | W Blade Width mm [in.] | kN/m | Max. Ton m [ft.] | 515 20.276″ [515mm] | Sectionalized 575x 22.638″ [575mm] | Sectionalized 550x 21.654″ [550mm] |
|---|---|---|---|---|---|---|---|
| **P900 SERIES — 30° HEMMING PUNCH** | | | | | | | |
| 175 [6.889] | EB1330010-6 P900 175 6mm | 6.0 [.236] | 1,000 | 102 [31] | | | |
| | EB1330010-8 P900 175 8mm | 8.0 [.314] | | | | | |
| | EB1330010-10 P900 175 10mm | 10.0 [.393] | | | | | |
| | | | **Approx. Gross Weight Unboxed:** | | 23 lbs. | 26 lbs. | 25 lbs. |
| 250 [9.843] | EB2330010-6 P900 250 6mm | 6.0 [.236] | 1,000 | 102 [31] | | | |
| | EB2330010-8 P900 250 8mm | 8.0 [.314] | | | | | |
| | EB2330010-10 P900 250 10mm | 10.0 [.393] | | | | | |
| | | | **Approx. Gross Weight Unboxed:** | | 37 lbs. | 41 lbs. | 38 lbs. |

Tooling for special application available upon request.





Visit **wilsontool.com/MyAccount** for Drawings, Invoices, Tracking & More!

# HEMMING DIES — V900

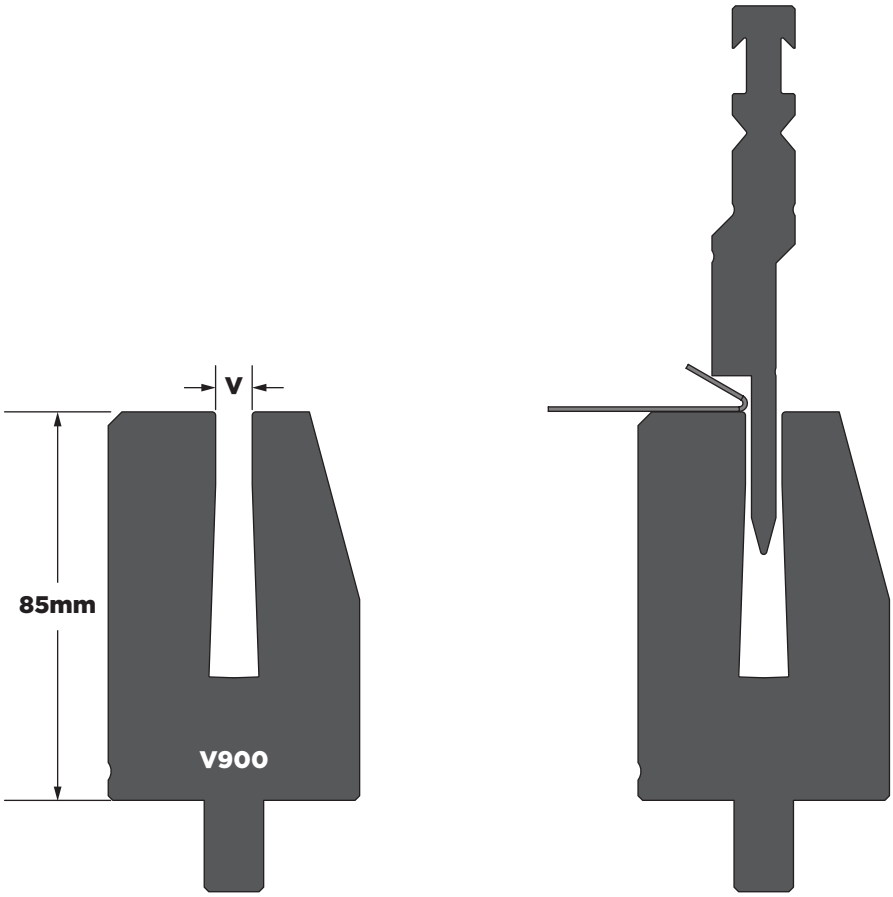


| H Height mm [in.] | Part No. | V Opening mm [in.] | kN/m | Max. Ton m [ft.] | 515 20.276″ [515mm] | Sectionalized 575x 22.638″ [575mm] | Sectionalized 550x 21.654″ [550mm] |
|---|---|---|---|---|---|---|---|
| **V900 SERIES — HEMMING DIE** | | | | | | | |
| 85 [3.346] | EB5330006 V900 Hem 6mm | 6.0 [.236] | 1,000 | 102 [31] | | | |
| | EB5330008 V900 Hem 8mm | 8.0 [.314] | | | | | |
| | EB5330010 V900 Hem 10mm | 10.0 [.393] | | | | | |
| | | | | **Approx. Gross Weight Unboxed:** | 38 lbs. | 42 lbs. | 40 lbs. |

Tooling for special application available upon request.

# FLATTENING PUNCHES — P11

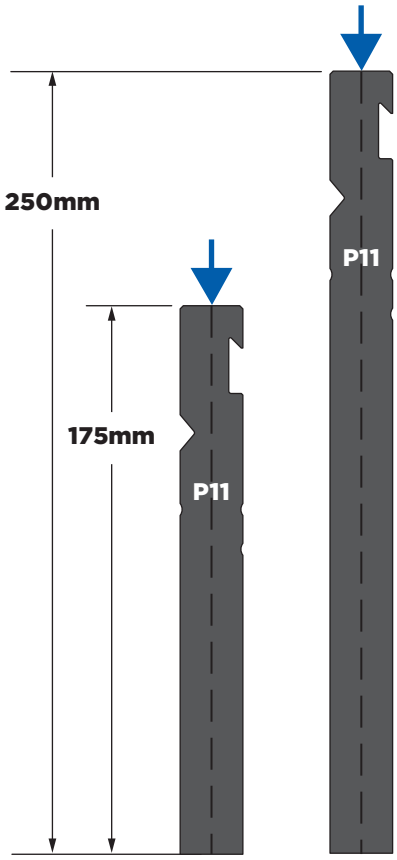


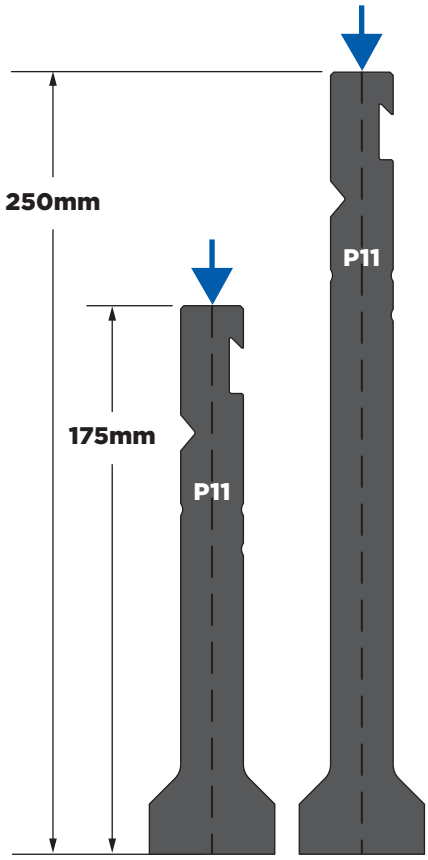


Indicates how tonnage is applied to punches

| H Height mm [in.] | Part No. | W Width mm [in.] | kN/m | Max. Ton m [ft.] | 515 20.276″ [515mm] | Sectionalized 575x 22.638″ [575mm] | 550x 21.654″ [550mm] | 425x 16.732″ [425mm] |
|---|---|---|---|---|---|---|---|---|
| **P11 SERIES** | | | | | | | | |
| 175 [6.889] | EB13F20 P11 65206.011 | 20 [0.787] | 2,000 | 204 [62] | | | | |
| | **Approx. Gross Weight Unboxed:** | | | | 30 lbs. | 34 lbs. | 32 lbs. | 25 lbs. |
| | EB13F40 P11 65206.011 | 40 [1.575] | 2,000 | 204 [62] | | | | |
| | **Approx. Gross Weight Unboxed:** | | | | 34 lbs. | 38 lbs. | 36 lbs. | 28 lbs. |
| 250 [9.843] | EB23F20 P11 65206.011 | 20 [0.787] | 2,000 | 204 [62] | | | | |
| | **Approx. Gross Weight Unboxed:** | | | | 44 lbs. | 49 lbs. | 47 lbs. | 36 lbs. |
| | EB23F40 P11 65206.011 | 40 [1.575] | 2,000 | 204 [62] | | | | |
| | **Approx. Gross Weight Unboxed:** | | | | 47 lbs. | 53 lbs. | 51 lbs. | 39 lbs. |

Tooling for special application available upon request.





Visit **wilsontool.com/MyAccount** for Drawings, Invoices, Tracking & More!

# FLATTENING DIES

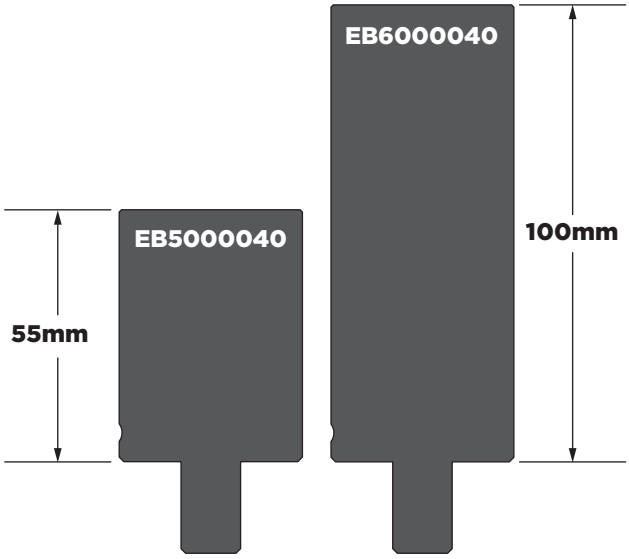


| H Height mm [in.] | Part No. | W Width mm [in.] | kN/m | Max. Ton m [ft.] | 515 20.276″ [515mm] | Sectionalized 575x 22.638″ [575mm] | 550x 21.654″ [550mm] | 425x 16.732″ [425mm] |
|---|---|---|---|---|---|---|---|---|
| **FLATTENING DIES** | | | | | | | | |
| 55 [2.165] | EB5000040 64201.0000 | 40 [1.575] | 2,000 | 204 [62] | | | | |
| | **Approx. Gross Weight Unboxed:** | | | | 22 lbs. | 24 lbs. | 23 lbs. | 18 lbs. |
| 100 [3.937] | EB6000040 64201.0000 | 40 [1.575] | 2,000 | 204 [62] | | | | |
| | **Approx. Gross Weight Unboxed:** | | | | 38 lbs. | 42 lbs. | 40 lbs. | 31 lbs. |

Tooling for special application available upon request.

# OFFSET PUNCHES & DIES



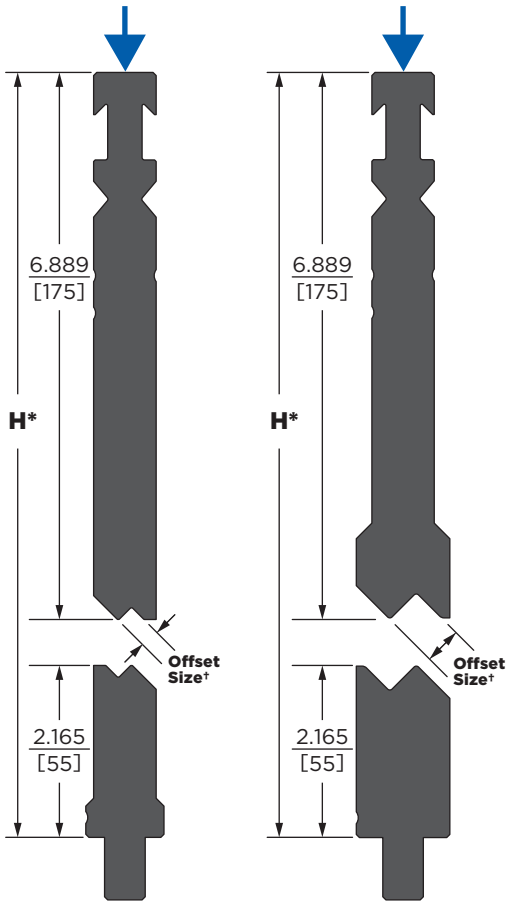


**6–8mm OFFSET** **10–12mm OFFSET**

Indicates how tonnage is applied to punches

| Part No. | Angle | H* Height mm [in.] | Offset Size mm [in.] | Effective V mm [in.] | kN/m | Max. Ton m [ft.] | 515 20.276″ [515mm] | Sectionalized 575x 22.638″ [575mm] | Sectionalized 550x 21.654″ [550mm] | Sectionalized 425x 16.732″ [425mm] |
|---|---|---|---|---|---|---|---|---|---|---|
| **OFFSET PUNCHES & DIES** | | | | | | | | | | |
| EB3190060 | 90° | 236.3 [8.908] | 6.0 [.236] | 8.5 [.334] | 1,300 | 133 [40] | | | | |
| EB3190080 | | 225.2 [8.865] | 8.0 [.314] | 11.3 [.445] | | | | | | |
| | | | | | | **Approx. Gross Weight Unboxed:** | 41 lbs. | 46 lbs. | 44 lbs. | 34 lbs. |
| EB3190100 | 90° | 223.8 [8.809] | 10.0 [.393] | 14.1 [.55] | 1,300 | 133 [40] | | | | |
| EB3190120 | | 222.3 [8.754] | 12.0 [.472] | 16.9 [.667] | | | | | | |
| | | | | | | **Approx. Gross Weight Unboxed:** | 46 lbs. | 51 lbs. | 49 lbs. | 38 lbs. |

*Height dimensions are for shut height.

†Offset size may vary up to -.020″ [0.5mm] after bending. All angles will be obtuse. Special offset sizes are available at additional cost.



Visit **wilsontool.com/MyAccount** for Drawings, Invoices, Tracking & More!

# PUNCH & DIE HOLDERS

Bystronic press brakes are not limited to Bystronic tooling — if you have the correct holder. Wilson Tool can manufacture holders for virtually any style of tooling available. Just provide us with the tooling style you would like to hold, along with the height and width, and our tooling experts will take care of the rest! Holders are NOT limited to the options shown below.

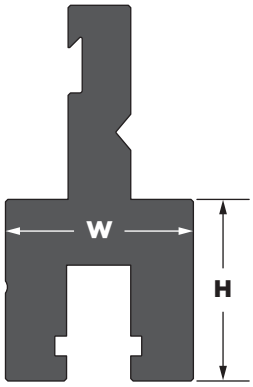


WT

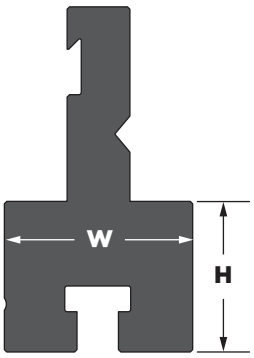


AMERICAN

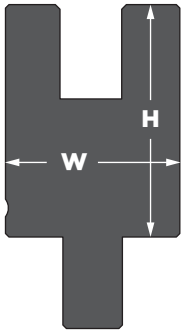


AMERICAN

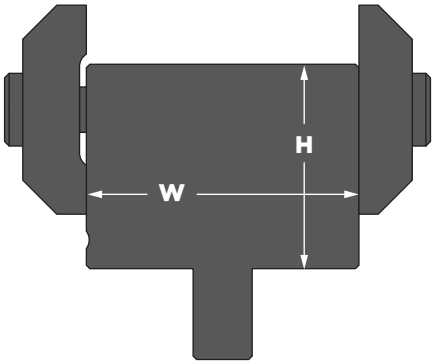


EUROPEAN

| Part No. | H Height mm [in.] | kN/m | Max. Ton m [ft.] | 500 19.685″ [500mm] | Sectionalized X 41.339″ [1050mm] | Sectionalized X1 19.685″ [500mm] | Sectionalized X2 21.654″ [550mm] |
|---|---|---|---|---|---|---|---|
| **WT TO WT DIE HOLDER** | | | | | | | |
| 6DH45 | 45 [1.772] | 1700 | 175 [52] | | | | |
| | | | **Approximate Gross Weight, Unboxed:** | 16 lbs. | 34 lbs. | 16 lbs. | 17 lbs. |

Tonnage is based on direct load and does not apply for thrusting applications.
Set screws every 2″.

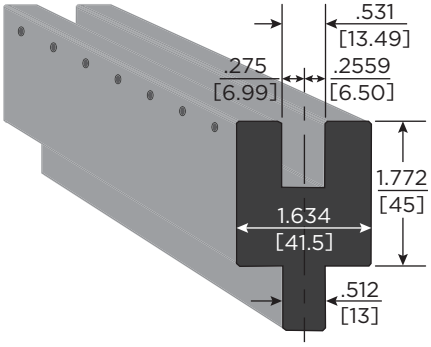


RF-A HOLDERS

# SPECIAL TOOLING

EUROPEAN

WT-STYLE

AMERICAN

BYSTRONIC

## CHALLENGE OUR "NEVER SAY NO" ATTITUDE

We regularly help customers with their most challenging applications. Our innovative solutions simplify complex bends and make the impossible possible. We are defined by our "never say no" attitude. Bring us your most complex problem and we will work with you until we've found an effective solution.

**Quality Materials — Quality Control**
We combine premium materials with specialized manufacturing systems to produce extraordinary products that outlast the competition.

**Quick Quotes — Short Lead Times**
With the fastest lead times in the industry, our tool might ship before the competition even provides a quote.

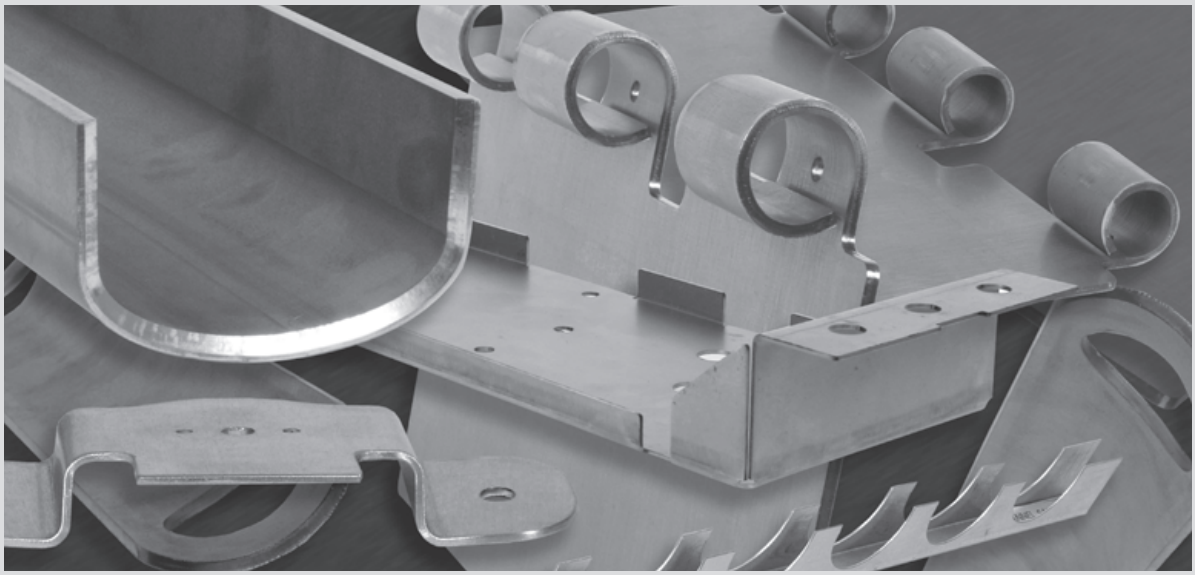





Visit **wilsontool.com/MyAccount** for Drawings, Invoices, Tracking & More!

# BRAKE PARTNER®

**Make Punch Press Forms in the Press Brake**

For fabricators who have migrated away from punch presses to laser cutting machines, or for those whose punch presses are running at full capacity, Brake Partner® from Wilson Tool International is an especially helpful solution.

Brake Partner, manufactured to fit in virtually any press brake, features a pressure-pad system which provides blank-holding and stripping, and can be used with or without guide posts, depending on the application.

**Enjoy These Cost Saving Benefits**

- Reduce press brake special tooling costs
- Punch press tooling has shorter lead times
- Put your existing press brakes to work on applications that were previously impossible on a punching machine
- Reduce outsourcing of punching applications
- Streamline equipment usage and create more flexibility in your shop

**Scan QR Code to Watch the Video**

SPECIALS

# CORNER FORMER

To make a four-sided tray or door, the sides would traditionally be folded, the corners welded and the joint ground, to produce an acceptable finish. This process is time consuming, costly and requires a certain skill set.

The Corner Former from Wilson Tool International allows you to use your existing press brake to bend up the corners, form the corners and then crop the edges to leave a clean, finished look without the need for welding, grinding and finishing.

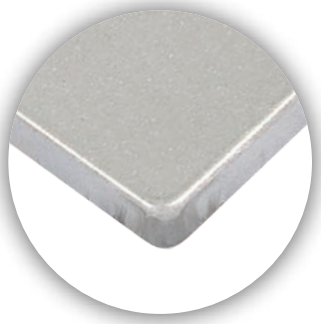

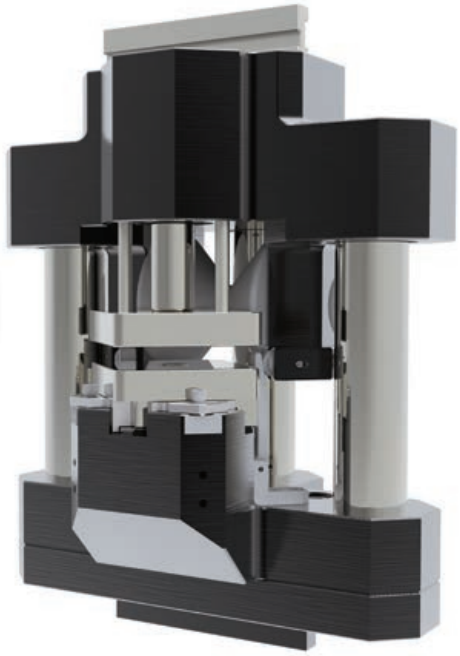

## 3 SIMPLE STEPS TO A FINISHED CORNER

**Step 1: Bend with Flare**
All four corners are bent like any other part except your standard die will have an engineered relief to achieve an intentionally flared bend at the ends.

**Step 2: Corner Former**
After the engineered flare, the part is moved to the corner forming step to roll the edge. You now have a complete corner with extra material that needs to be trimmed.

**Step 3: Corner Cropper/Trim**
In a quick and simple one-hit action, the corner cropper cuts the extra material flush to the edges of the tray or door. You have now made your part in one handling with little or no additional post processing needed.

**Scan QR Code to Watch the Video**

**Scan QR Code to See How Much You Can Save**



Visit **wilsontool.com/MyAccount** for Drawings, Invoices, Tracking & More!

# CUSTOM HEMMING

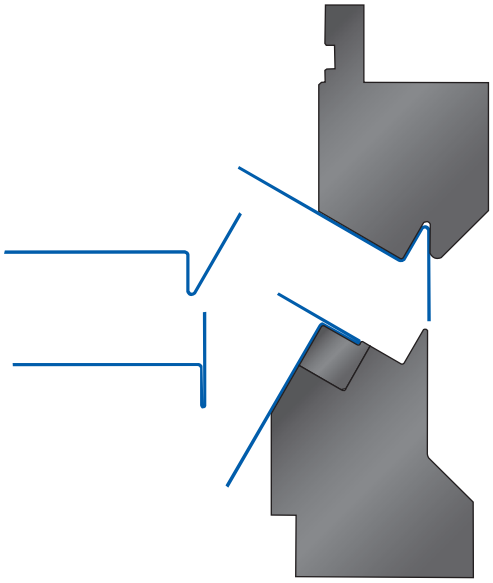

**AH1 — ANGLE HEM**

Typically used to form seams in excess of 1/2 inch.

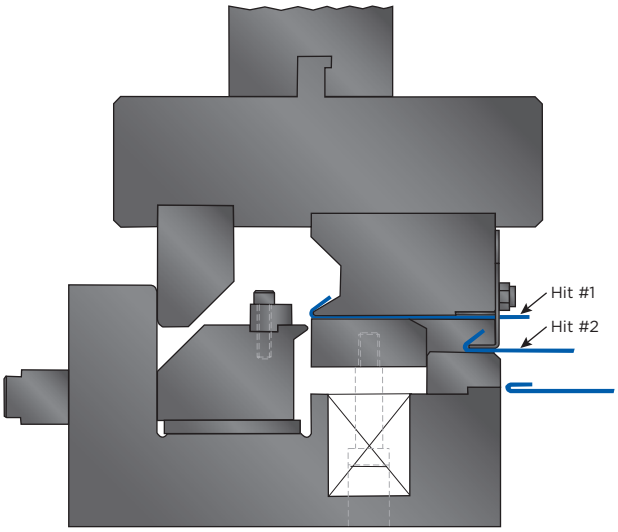


**FSH1 — FLAT SHEET HEM**

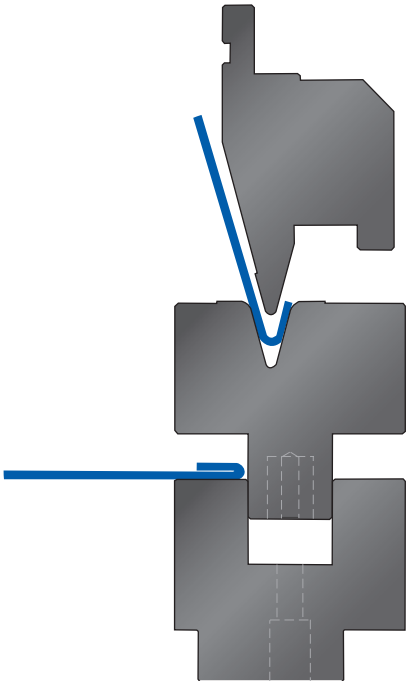

**HDH1 — HEAVY DUTY HEM**

Heavy duty hemming for thick gauge applications.

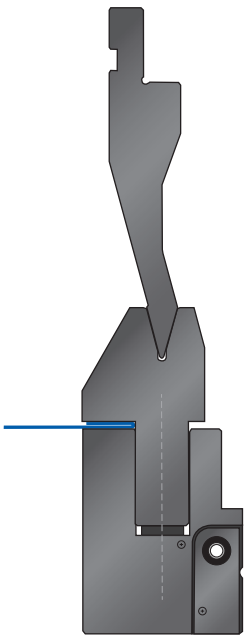

**PH1 — PNEUMATIC HEM**

This tool set introduces pneumatic cylinders to rapidly open and close the pre-form insert. This set removes the inconsistency associated with pre-forming or acute bending on a spring actuated insert.

# CUSTOM HEMMING

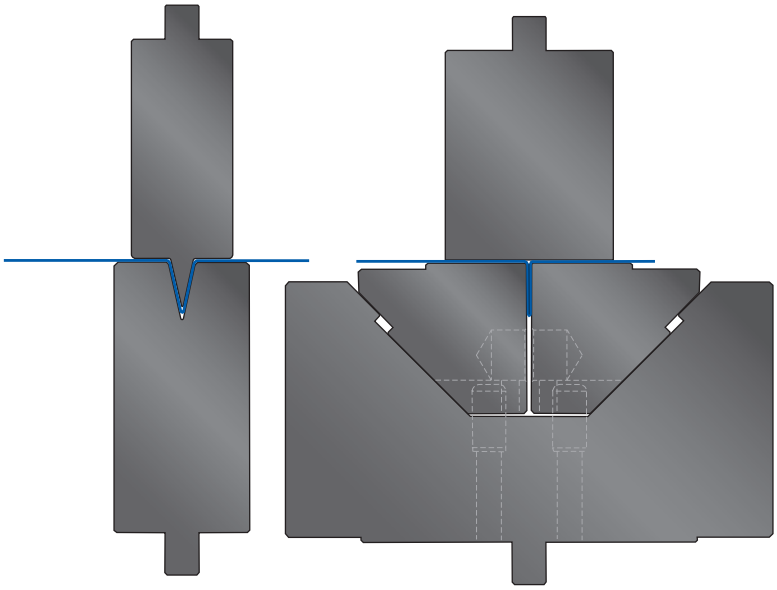

**SH1 — SEAM HEM**

Two tool sets. Two machine strokes

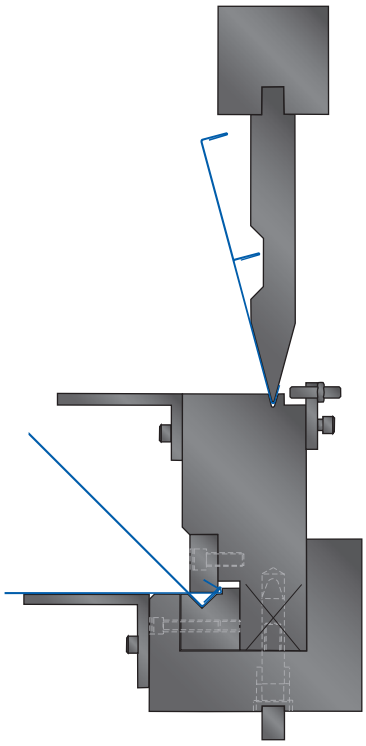

**SSH2 — STANDING SEAM HEM**

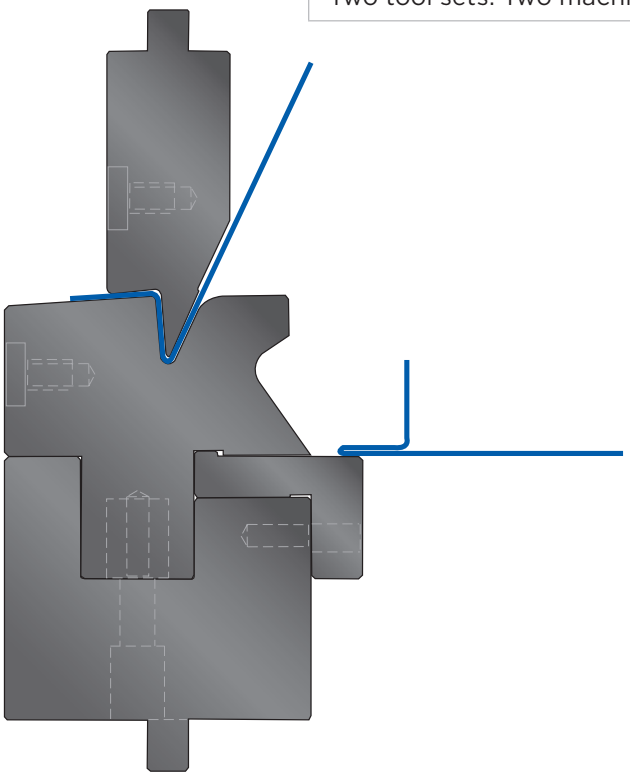

**SSH1 — STANDING SEAM HEM**

Used to form a standing seam in two strokes. The first stroke forms an acute angle offset, the second stroke closes the seam.

Scan QR Code to Watch the Video

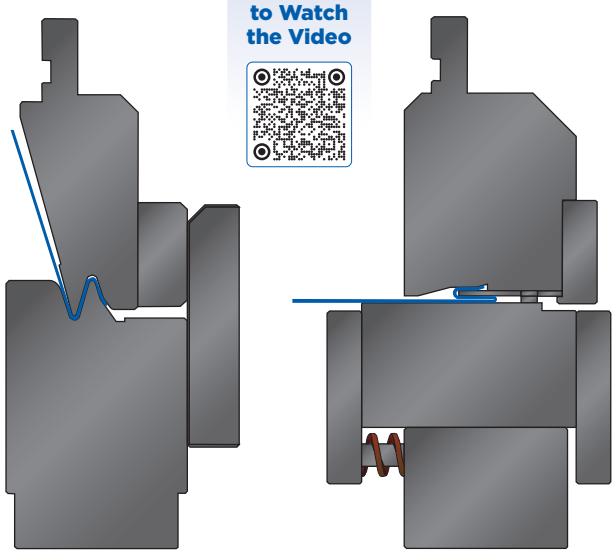

**ZH1 — Z HEM**

Creates a Z-hem or a Clip hem. Shim can be built in to maintain a gap in the hem. Two tool sets. Two machine strokes.





Visit **wilsontool.com/MyAccount** for Drawings, Invoices, Tracking & More!

# OFFSET TOOLS

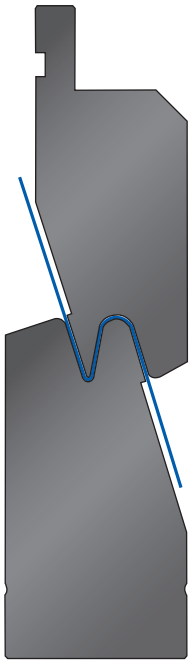

**AO1 — ANGLED OFFSET**

Scan QR Code to Watch the Video

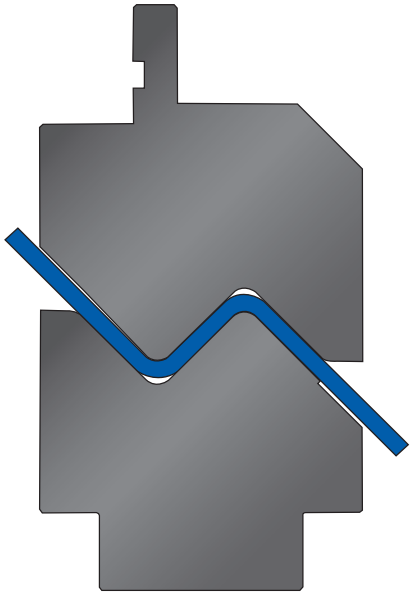

**LO1 — LARGE OFFSET**

Used for heavy gauge, large offset bending.

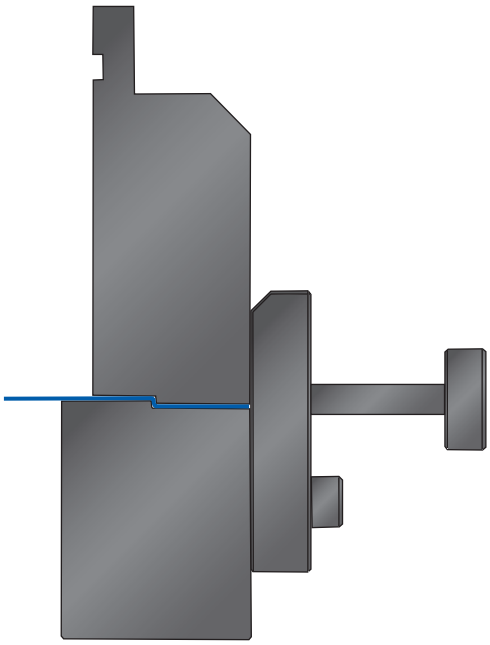

**HO1 — HORIZONTAL OFFSET**

For offsets that are approximately one material thickness. Prevents material whip up. Thrust plates and adjustable back gauging are provided.

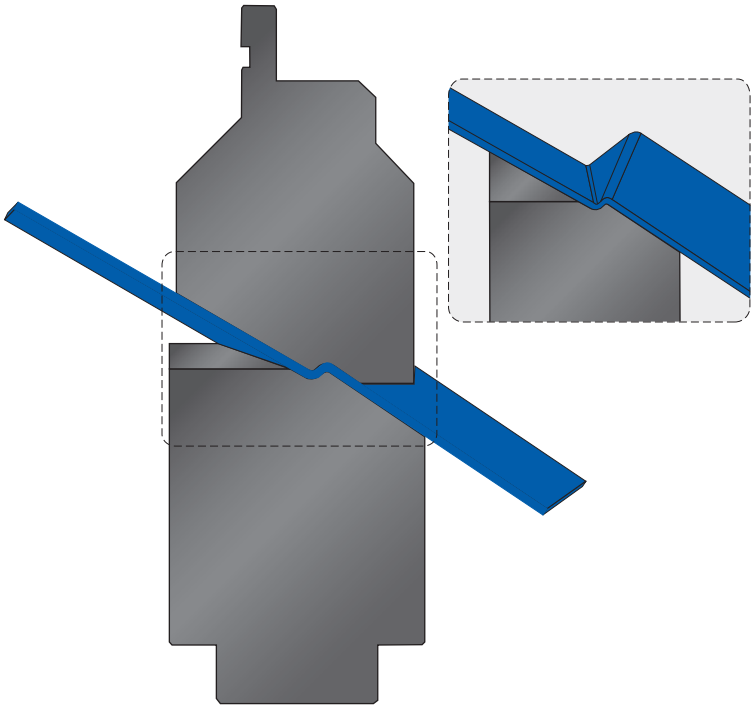

**NPO1 — NON PARALLEL OFFSET**

For offsets that have non-parallel flanges. Inset shows punch hidden for a clear view of the formed sheet.

# ADJUSTABLE DIES

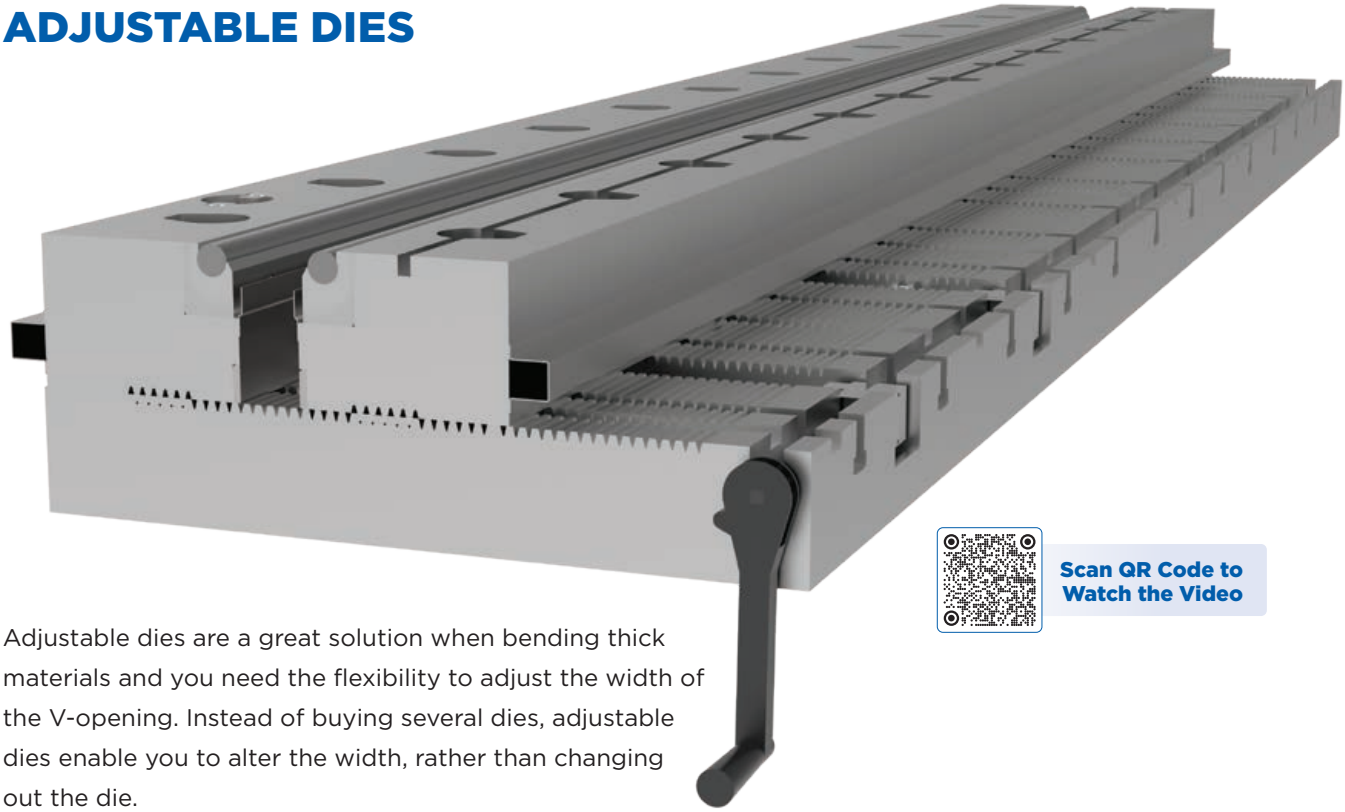

Scan QR Code to Watch the Video

Adjustable dies are a great solution when bending thick materials and you need the flexibility to adjust the width of the V-opening. Instead of buying several dies, adjustable dies enable you to alter the width, rather than changing out the die.

**Adjustable Die Features**

- Riding on spring-loaded ball bearings, openings are easily adjusted by one operator
- Available openings range from 1 to 24 inches and can be adjusted in 1-inch increments
- Capable of withstanding tonnage of up to 400 tons per foot, allowing easy thick material bending
- Induction hardened and hard chrome rollers help reduce required tonnage by as much as 20%
- Chrome rollers can be replaced at your facility

**Adjustable Die Options**

- Die assembly can be configured to remain on the press permanently and function as a standard die holder
- Cover bellows are available to keep the grooves that are used to adjust the dies free from dirt and dust
- Available clamping options for side blocks include manual and automated release and/or movement
- Available with Manual, Ball Screw, Hydraulic and CNC options

**Die Holder Slots**

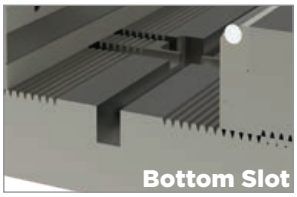

**Opening Adjustments**

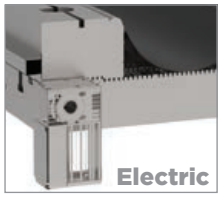


**Shoulder Inserts**

SPECIALS

# REPLACEABLE SHOULDER DIES

Dies that have a replaceable shoulder radius are ideal for extreme wear conditions like heavy plate and abrasive materials. Replacing the shoulder insert saves on replacement cost.

Since the radius is able to rotate during bending, friction and tonnage are reduced, resulting in reduced part marking and less tonnage on tooling and machinery.

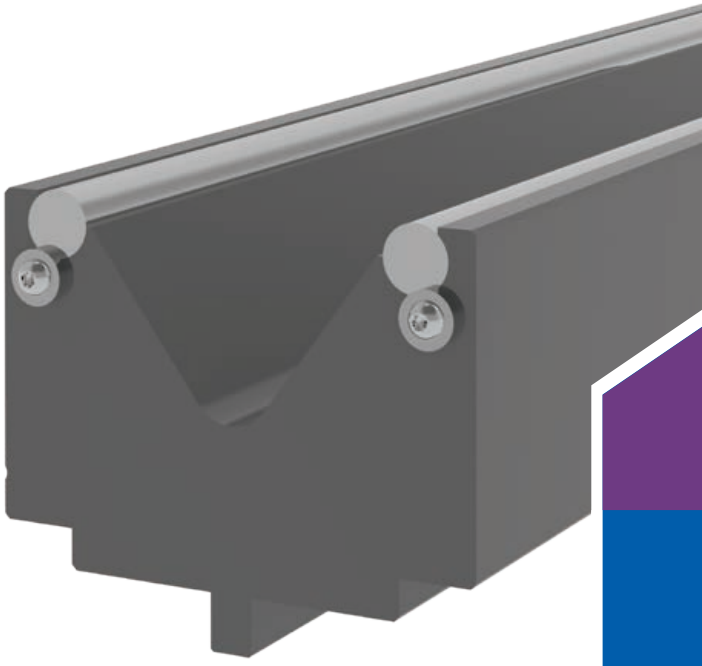

**Scan QR Code for More Thick Material Solutions**

# DOVETAIL HOLDER AND RADIUS

**Lighten Your Load with Two-Piece Punches**

Replaceable radius punches help limit tooling costs, reduce setup time and lighten tool changes. Tip inserts simply slide on and off the universal punch body, increasing the flexibility of each punch and minimizing heavy lifting for the operator.

**Replaceable Radius Punch Highlights**

- Setup is as simple as sliding the tip insert on and off the tool body
- No adjustment is required between punch radius changes
- Tip is lighter than a standard punch for easier tool changes
- Lighter tools reduces need for multiple operators
- Lighter tools creates a safer handling environment for operators
- Tool costs are minimized when purchasing one body with multiple tips
- Various angles and radii can be loaded into the same punch holder

**Dovetail** **T Style**

**Details**

- Made to suit specific needs
- Designed to tackle light- or heavy-duty bending
- Ground and induction hardened for optimal life and performance
- Dovetail or T Style attachment feature

**Scan QR Code to Watch the Video**

# LARGE RADII



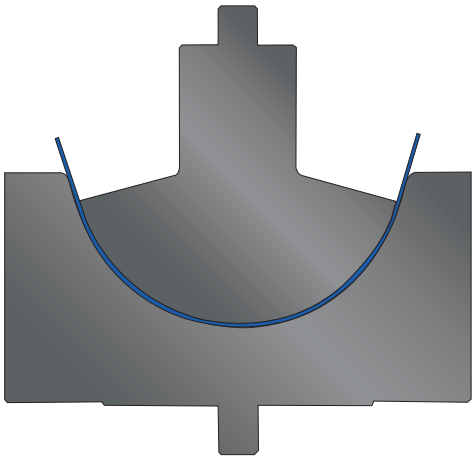

Scan QR Code to Watch the Video

**LR1 — LARGE RADIUS**

Bottoming radius set with spring-back allowance built in. It is manufactured to form a radius in a specific type and thickness of material for tight tolerance requirements.

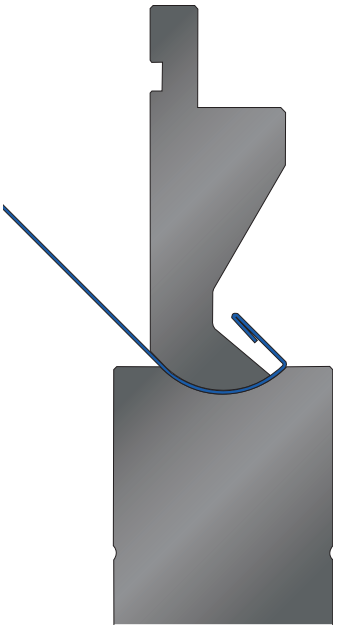

**LR2 — MULTI-HIT RADIUS**

Used when a full radius is required before the flange. The solution may require multiple strokes.

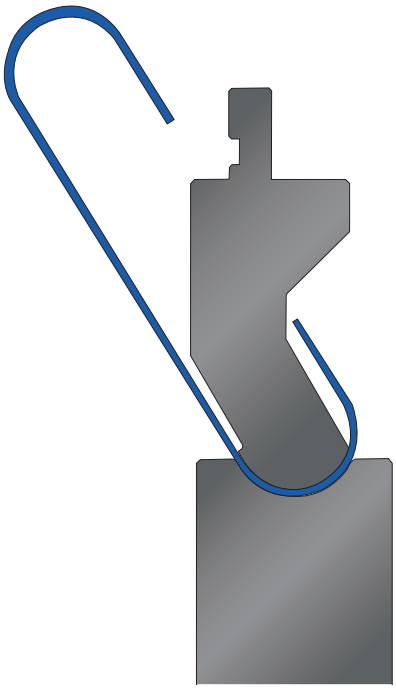

**LR3 — MULTI-HIT RADIUS**

Used when the return flange starts at the radius end. The solution may require multiple strokes.



Visit **wilsontool.com/MyAccount** for Drawings, Invoices, Tracking & More!

## STRENGTHENING RIB

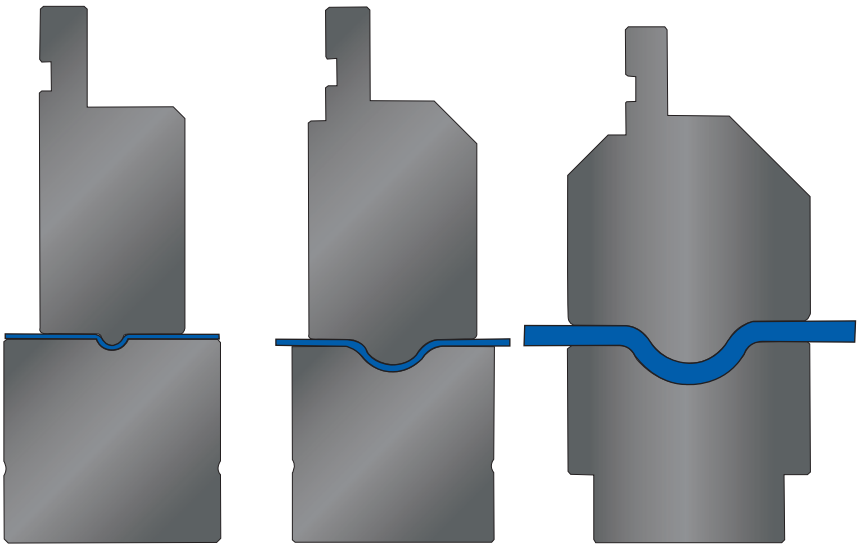

Scan QR Code to Watch the Video

| SR1 — STRENGTHENING RIB |
| --- |
| Produce a strengthening rib in one stroke. Spring back allowance is built in. Closed end and open end ribs are available. |

## V-RIB

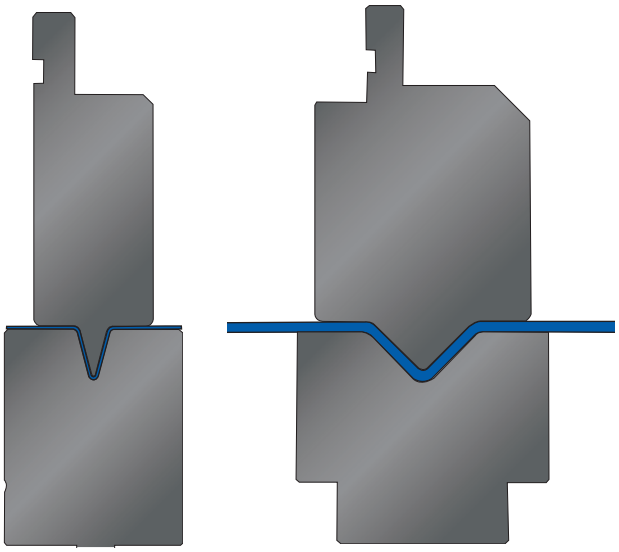

| VR1 — V RIB |
| --- |
| Produce a V rib in one stroke. Spring back allowance is built in. |

# FORMING

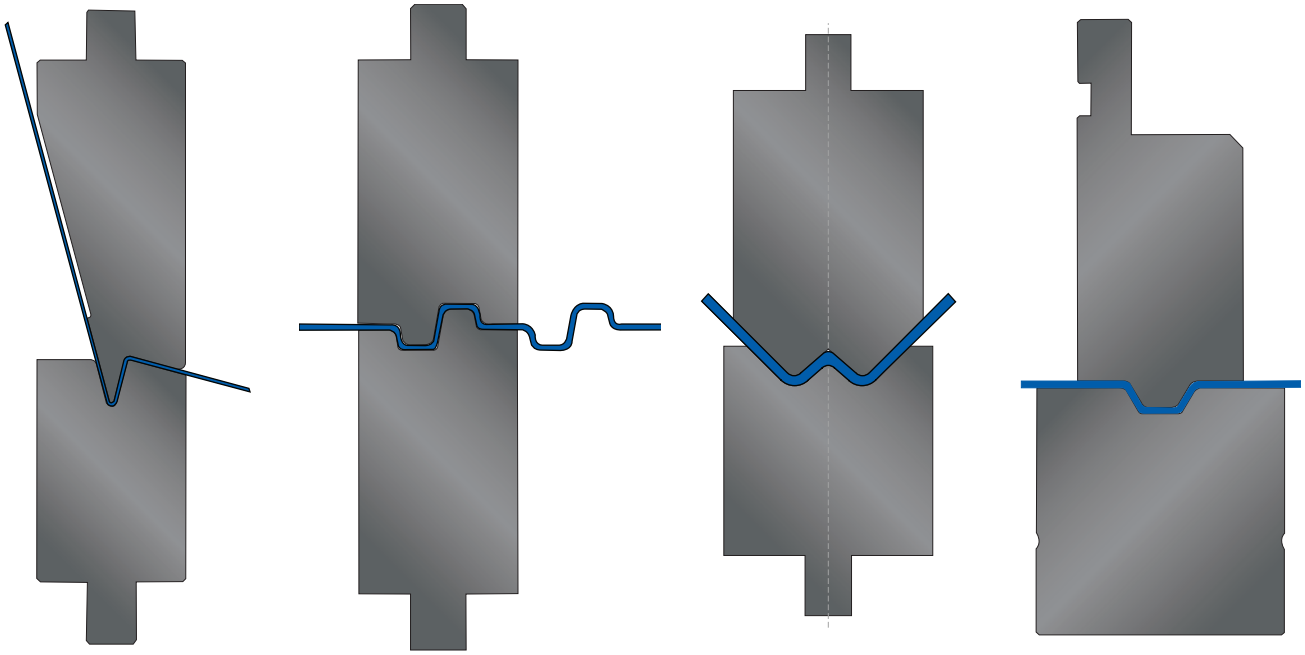

| FM1 — FORMING | FM2 — FORMING | FM3 — FORMING | OH1 — OPEN HAT |
|---|---|---|---|

A large variety of custom forming sets are available. Custom built to suit any specific requirement. Call for specific application requirements.

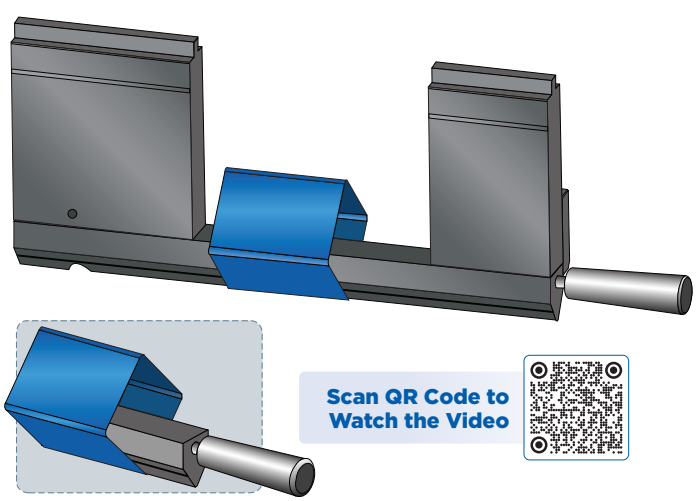

Scan QR Code to Watch the Video

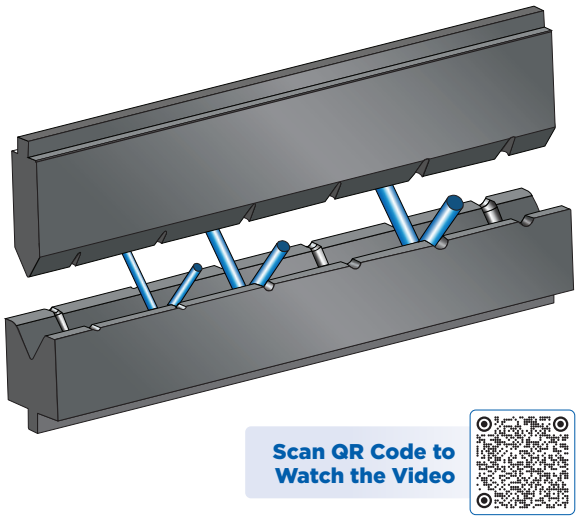

Scan QR Code to Watch the Video

**W1 — WINDOW**

Used when minimum return flange clearance is required.

**RB1 — ROD BENDING**

Provides nesting for the rod during the forming process.





Visit **wilsontool.com/MyAccount** for Drawings, Invoices, Tracking & More!

# STAMPING

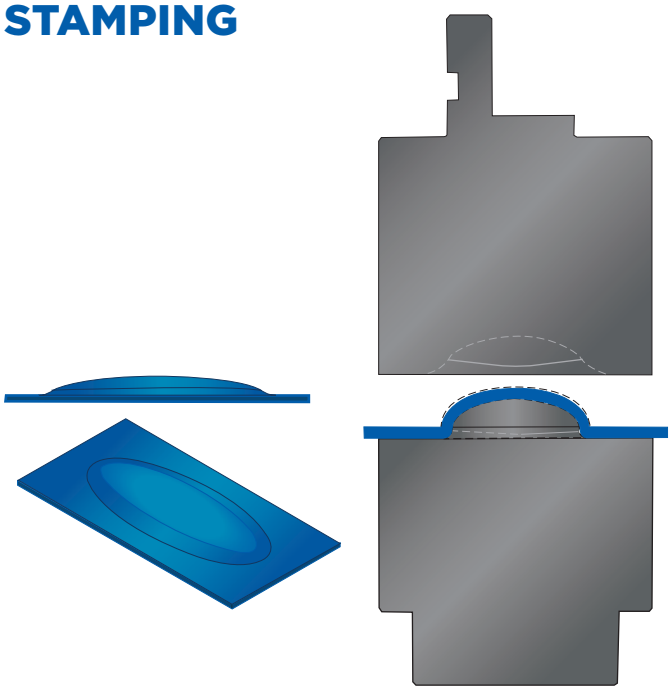

**EM1 — EMBOSS**

A variety of raised emboss and chisel point emboss sets are available.

**LG1 — LOGO**

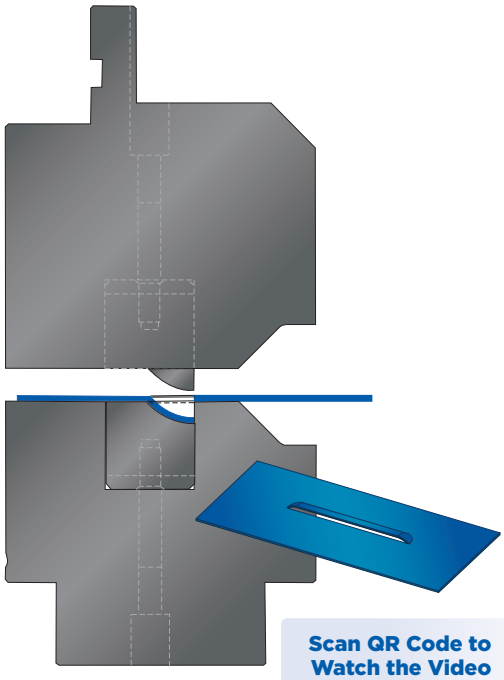

Scan QR Code to Watch the Video

**LL1 — LOUVER**

Multiple louver configurations are available. For louver forming, sheet must be pre-slit.

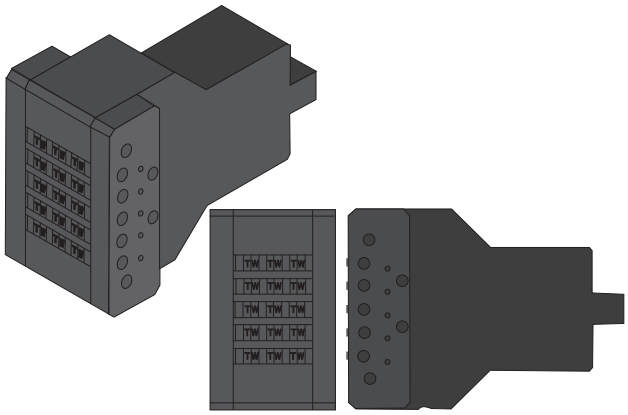

**LS1 — LETTER STAMP**

Provides chisel point embossing with interchangeable characters. Single row or multi-row available.

| Part No. | Description | Size | Price |
|---|---|---|---|
| Punch Character Holder — Call for Quote | | | |
| 65300003-500 | Flattening Block Die | — | |
| 6898 | Character | 3/32″ | |
| 6896 | Character | 1/8″ | |

# MECHANICAL



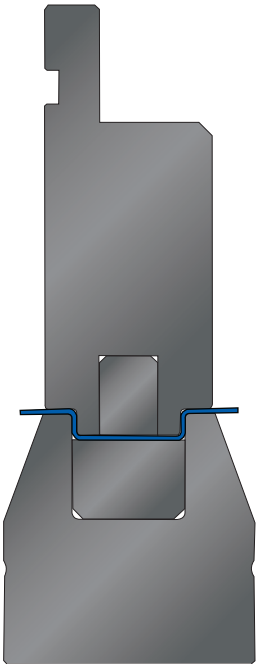

**HT1 — HAT CHANNEL**

Provides straight wall or angled wall hat channel bending in one stroke. Spring back allowance built in.

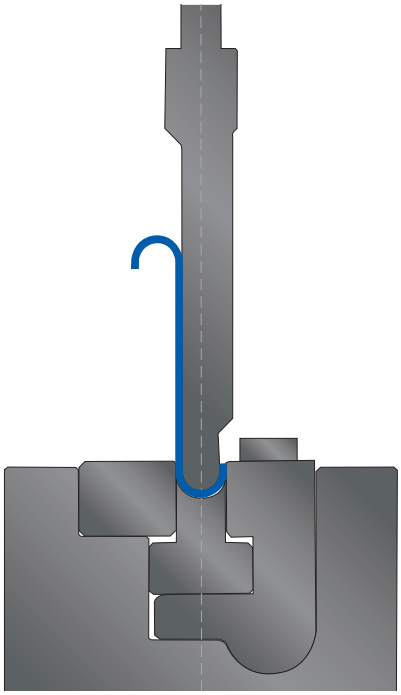

**UC1 — U CHANNEL**

Recommended for applications where considerable spring back is encountered. Secondary flattening operations may be required.

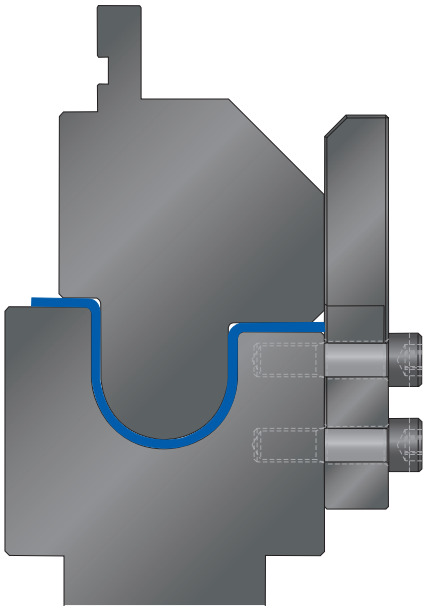

**UC2 — U CHANNEL**

Recommended for applications where considerable spring back is encountered. Secondary flattening operations may be required.

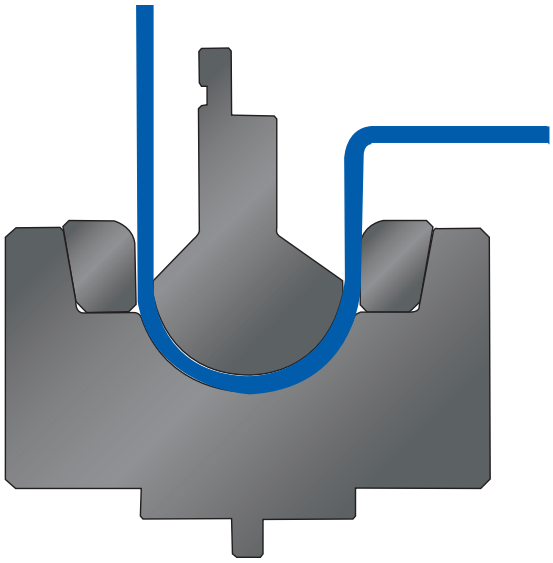

**UC3 — U CHANNEL**

Recommended for applications where considerable spring back is encountered. Secondary flattening operations may be required.



Visit **wilsontool.com/MyAccount** for Drawings, Invoices, Tracking & More!

# MECHANICAL

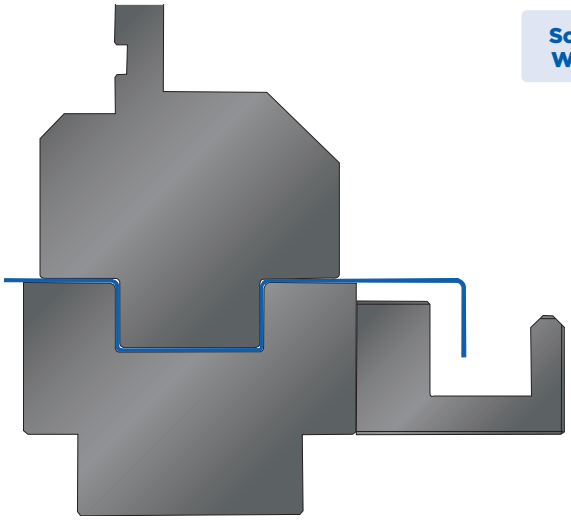

**C1 — CHANNEL**

For deep channels when the channel bottom needs to remain flat.

Scan QR Code to Watch the Video

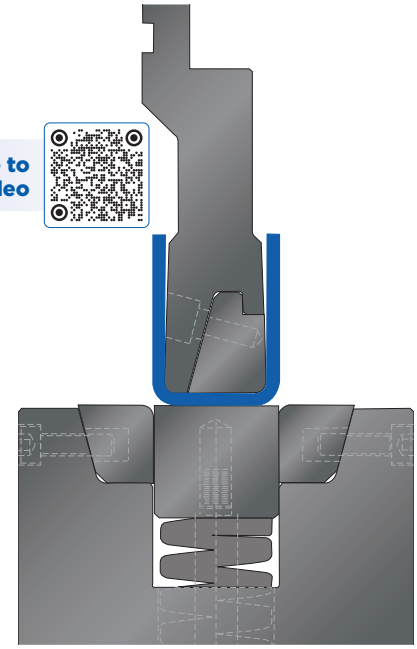

**C2 — CHANNEL**

For deep channels when the channel bottom needs to remain flat.

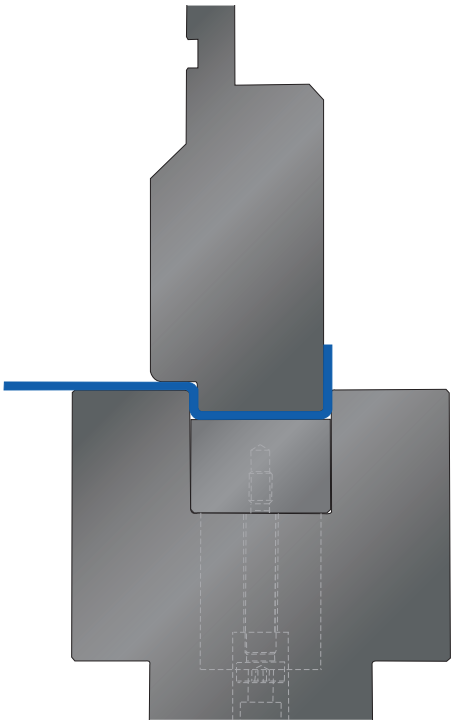

**C3 — CHANNEL**

For deep channels when the channel bottom needs to remain flat.

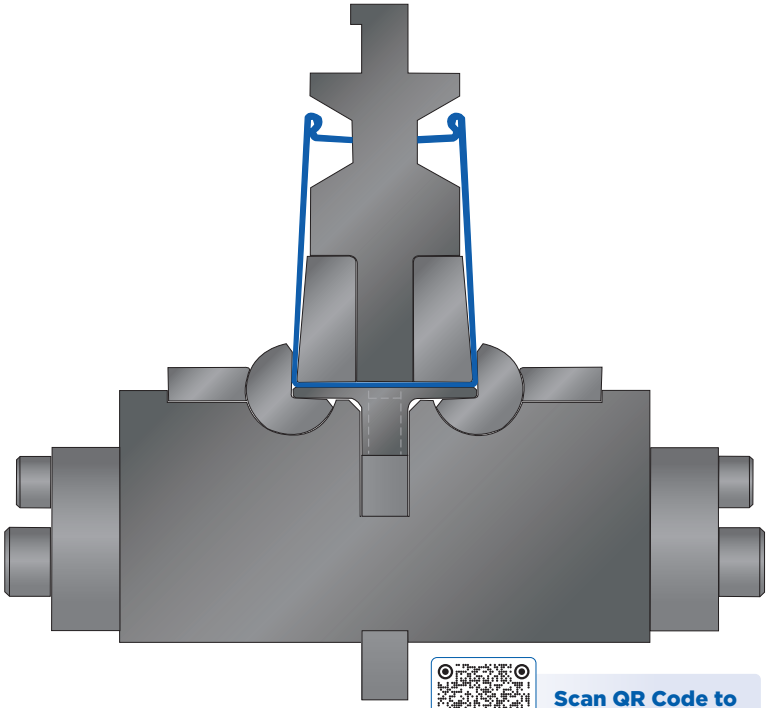

Scan QR Code to Watch the Video

**C4 — ROTARY BEND CHANNEL**

For deep channels when the channel bottom needs to remain flat.

# MECHANICAL



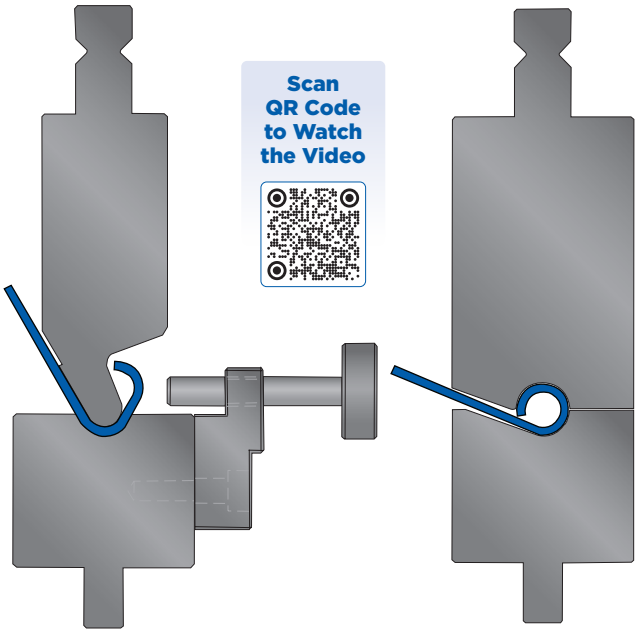

Scan QR Code to Watch the Video

**CL1 — CURL TOOL SET**

Two tool sets, three machine strokes.

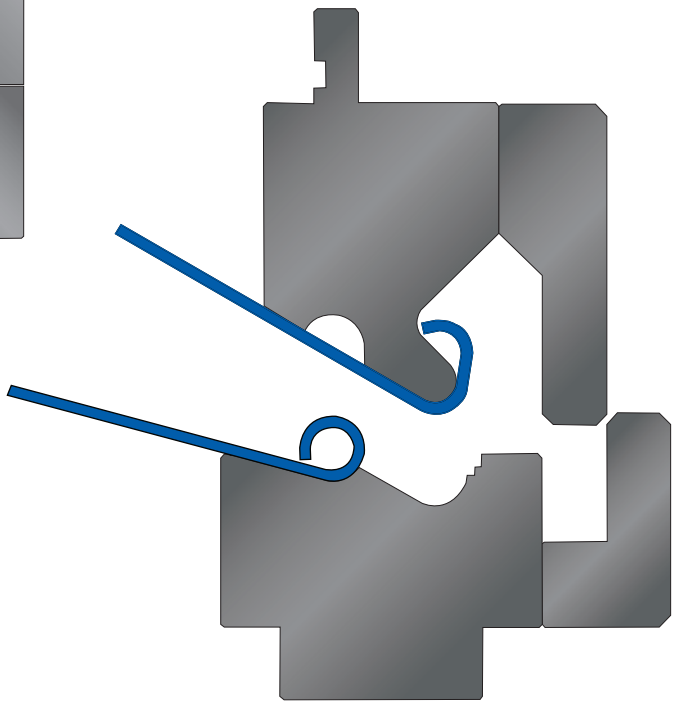

**CL2 — CURL TOOL SET**

Typically used for thick materials and large diameter curls.
One tool set, three machine strokes.

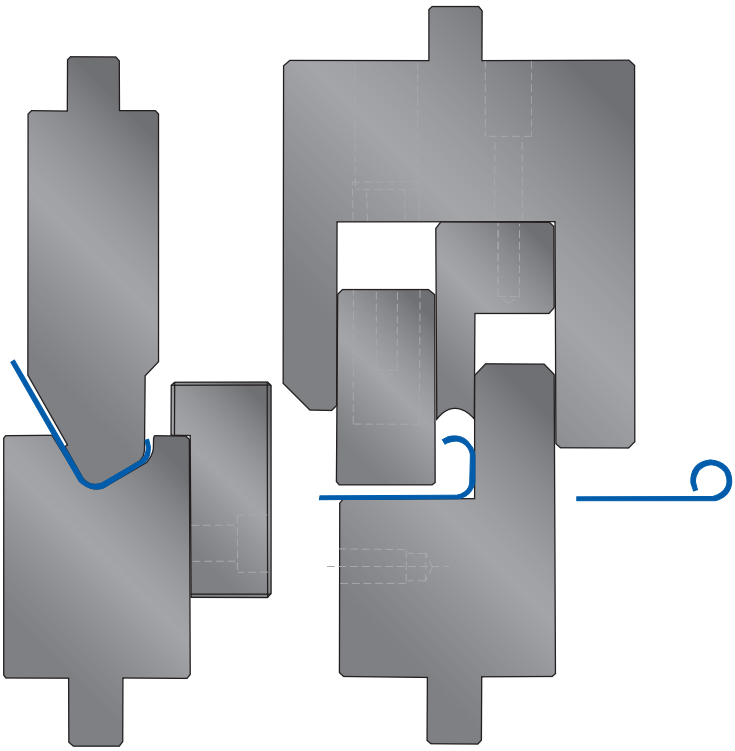

**CL3 — CURL**

Used for hinges and corner beading.
Two tool sets, two machine strokes.



Visit **wilsontool.com/MyAccount** for Drawings, Invoices, Tracking & More!

# MECHANICAL

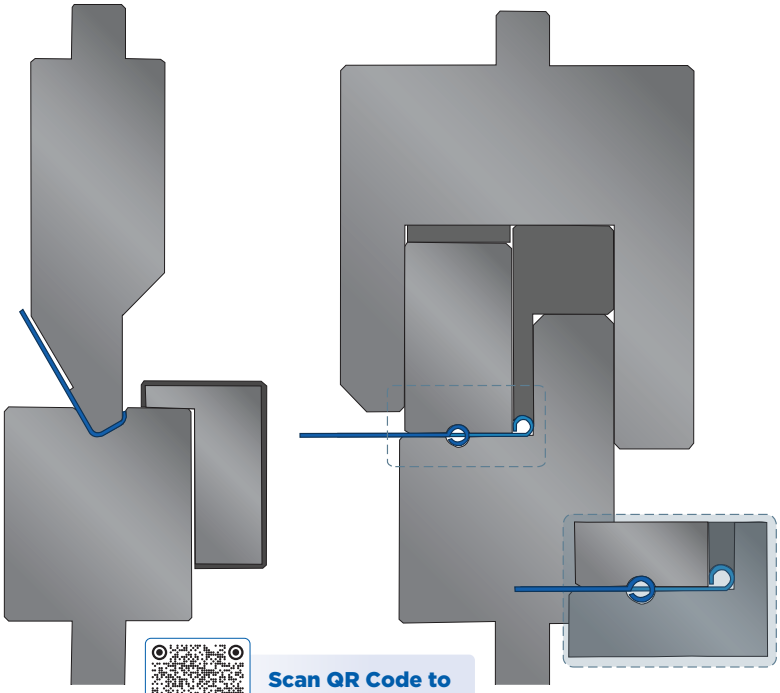

Scan QR Code to Watch the Video

**CL4 — CENTER CURL APPLICATION**

Two tool sets, three machine strokes.

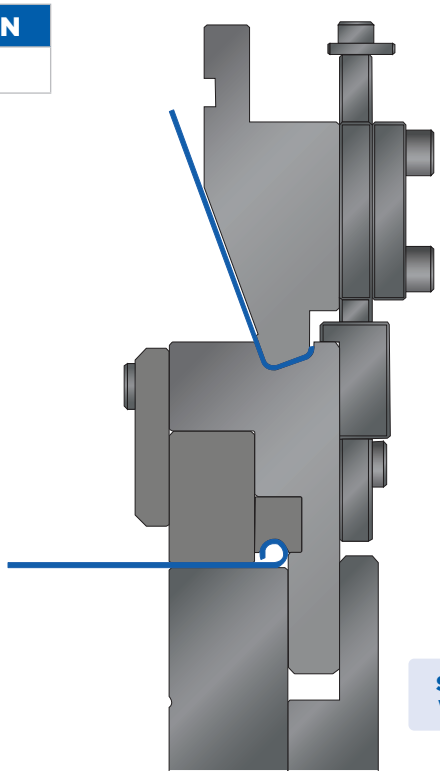

Scan QR Code to Watch the Video

**CL5 — DOUBLE DECKER TOOL SET**

Used for hinges and corner beading.
One tool set, two machine strokes.

# SPECIAL SHAPE PUNCHES



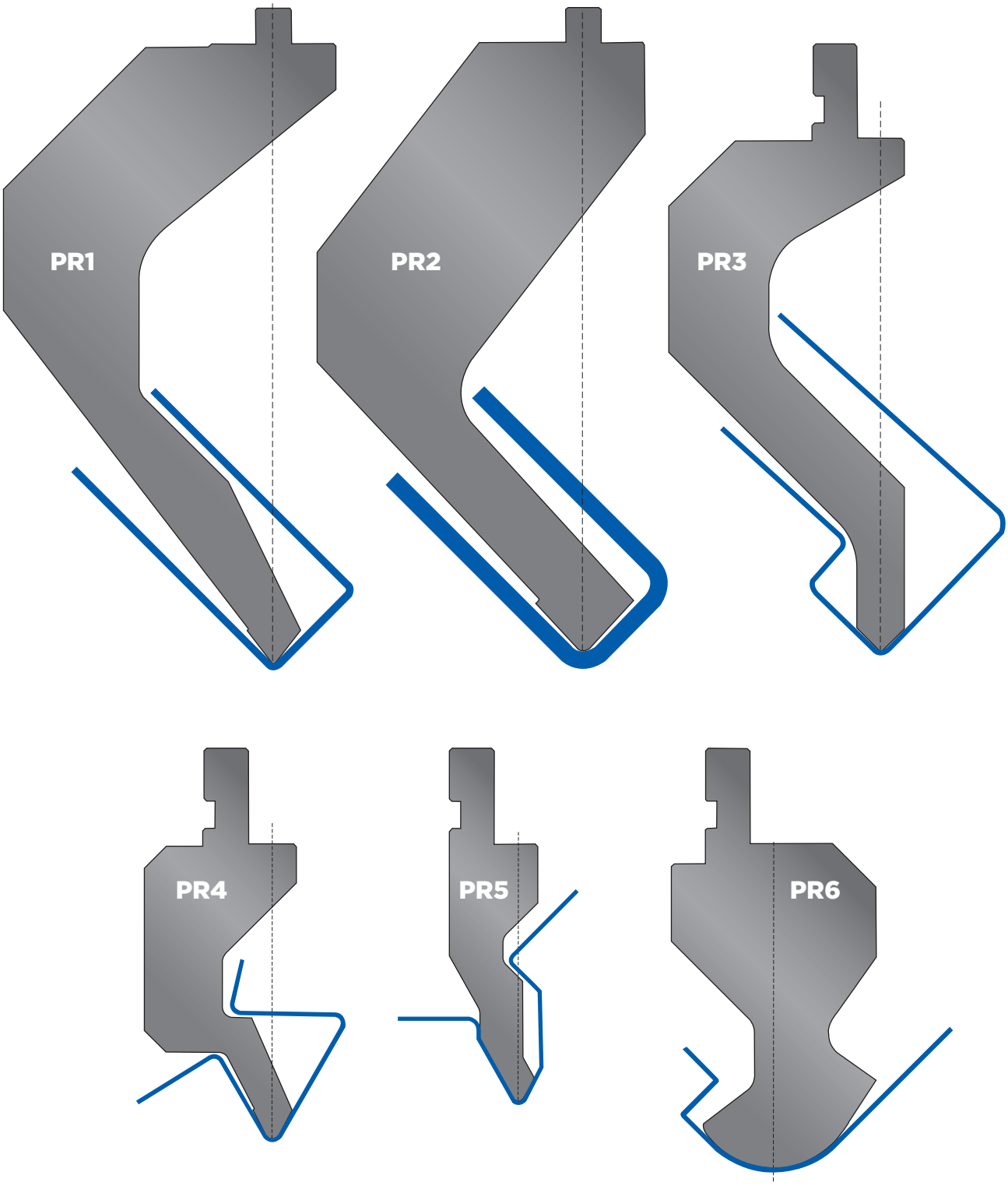




Visit **wilsontool.com/MyAccount** for Drawings, Invoices, Tracking & More!

# PUNCH HOLDERS

**WT — AMERICAN**

With Set Screws

**AMERICAN SELF-SEAT HOLDER**

WT to American with Clamp Plate

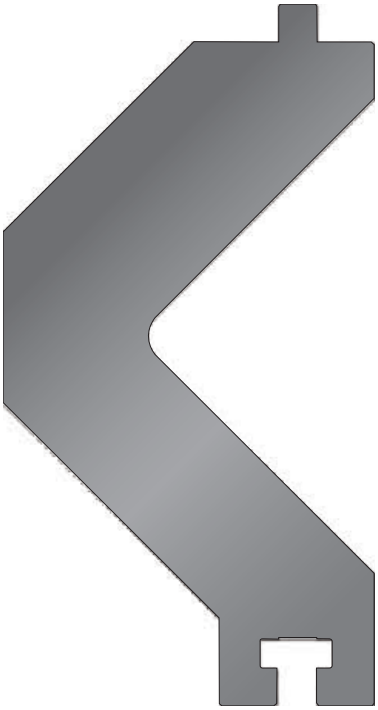

**AMERICAN DEEP GOOSENECK HOLDER**

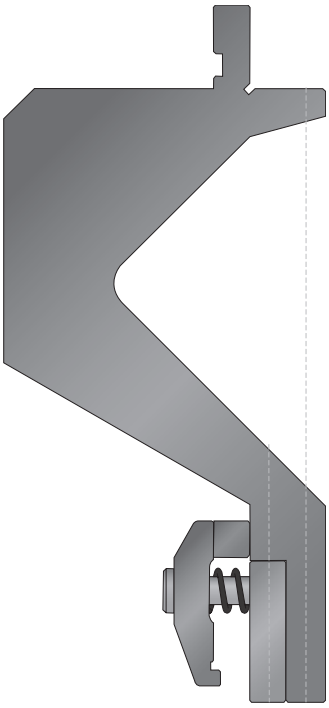

**EURO Z1 OR Z2 CLAMPING**

Part No. 43002

**PUNCH HOLDERS**

Stack punch holders to make a taller punch to bend tall side flanges or to replace worn OEM punch holders that need replacement. These holders can be made in small sections or one piece to fit the length of your brake.

# PUNCH HOLDERS

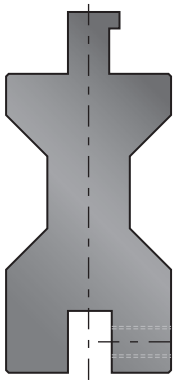

**RA1 — DOG BONE**

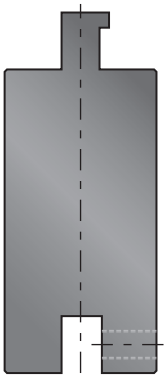

**RA2 — SET SCREW**

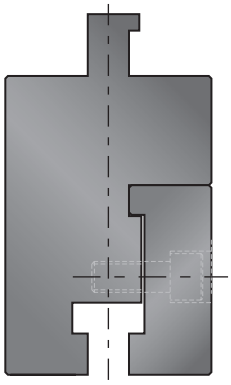

**RA3 — CLAMP PLATE**

Holders are commonly made to replace any original OEM punch and/or die holders or to accommodate part configuration. These designs can be one solid length or sections that are easier to handle.

# DIE HOLDERS

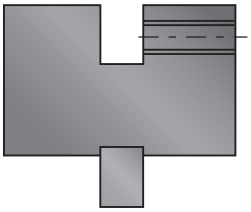

**DIE HOLDERS**

Die holders can raise the die to help with down flange interference or to replace worn OEM die holders that need replacement. These holders can be made in small sections or one piece to fit the length of your brake.





Visit **wilsontool.com/MyAccount** for Drawings, Invoices, Tracking & More!

# WIPING AND ROTARY BENDING

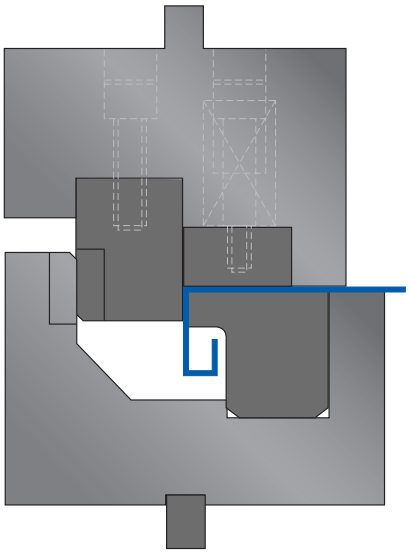

Scan QR Code to Watch the Video

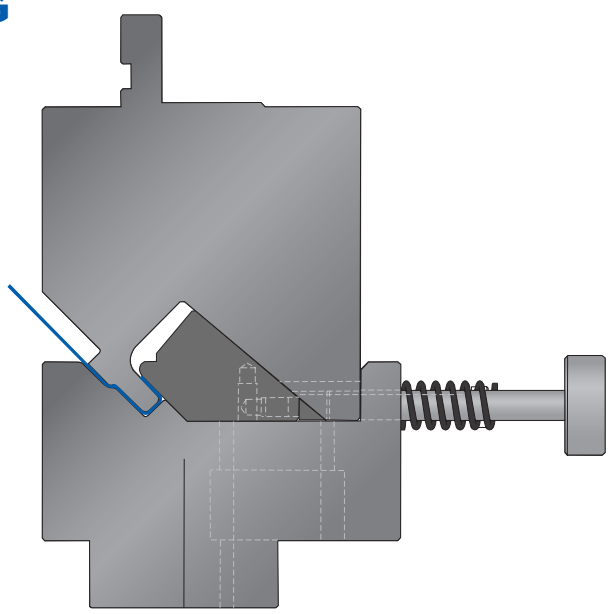

**WD1 — WIPE DOWN**

Holds the sheet flat while wiping the flange down. Ideal for large panels and high production.

**WO1 — WIPING FORM**

Holds the sheet flat while wiping the flange down. Ideal for large panels and high production.

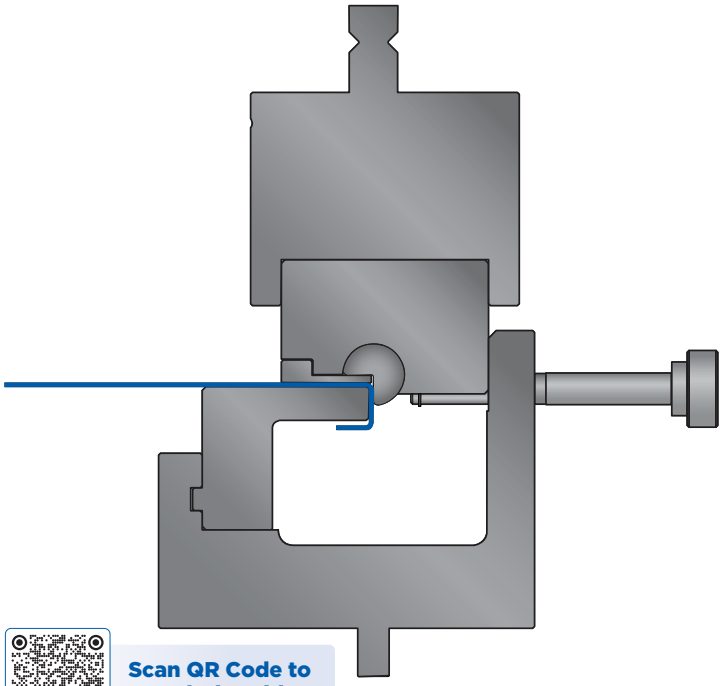

Scan QR Code to Watch the Video

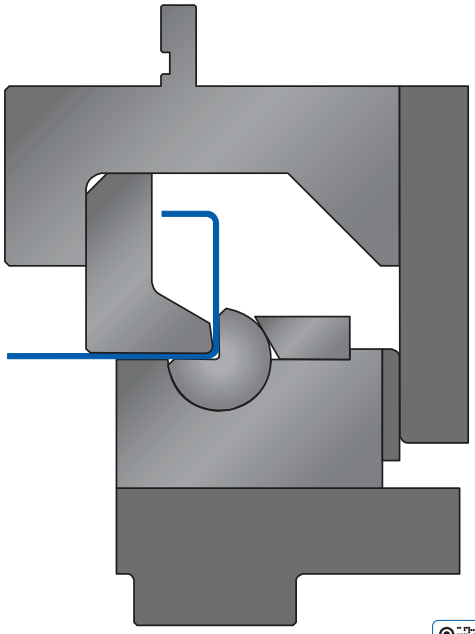

Scan QR Code to Watch the Video

**RTD — FORM DOWN**

**RTU — FORM UP**

**ROTARY FLANGE FORMING**

Holds sheet flat while forming. Overbend allowance is built in to compensate for material springback. Ideal for large panels and high production.

## 30/60 DEEP BOX BENDING

When forming a 4-sided box, the punch must be sufficient height to prevent the pre-formed side from striking the upper beam. This is a thrusting application and not suitable for all press brakes.

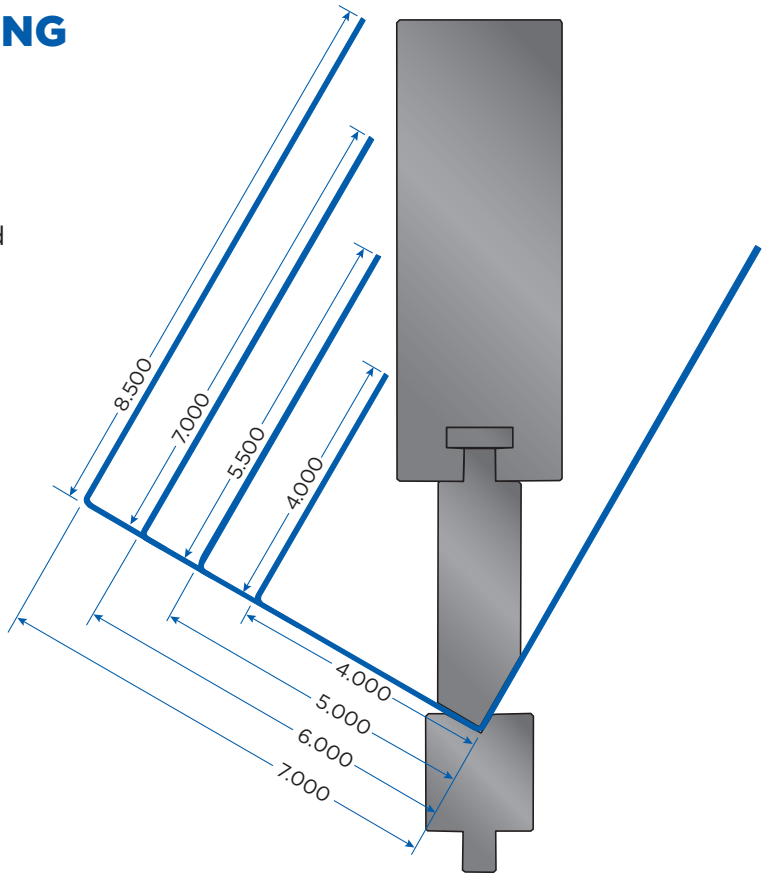


## SWING EAR SECTIONS

- Box bending with return flanges.
- Standard bend length 150mm each ear on all punch profiles. 100mm length available on select profiles.
- Ear(s) recess/fall in left to right .50 – .75″, not to be confused with vertical movement. There will be approximately 1.0 – 1.5″ of relief to rotate and drop the finished part.
- Punch profile will match the standard profile only in height, angle and radius. Width will be wider where hinged.

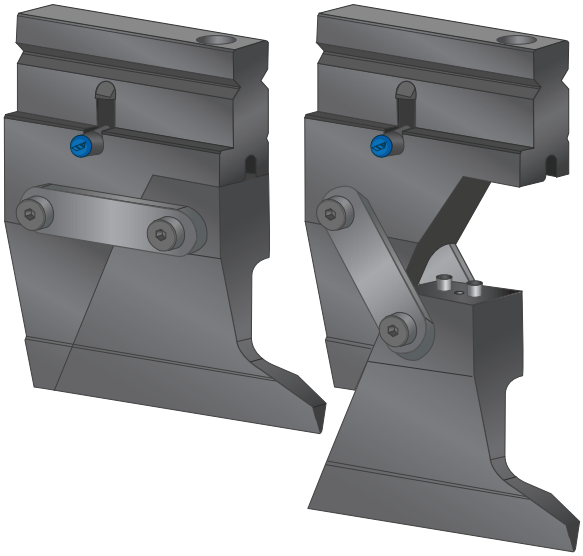

**Scan QR Code to Watch the Video**

Left and right ear sections shown in illustration.



Visit **wilsontool.com/MyAccount** for Drawings, Invoices, Tracking & More!

# UNITIZED TOOLING

Unitized tooling offers flexibility for various applications, including press brakes, Multicyl setups, and presses. For press brakes, simply attach the units to a bed rail or use a job-specific template. These templates function as a plug-and-play system: attach the template to the machine, secure it and begin punching parts. Once finished, remove the entire plate, including the mounted units. To reduce weight, the plates can be segmented.

Bed rails with adjustable spacers allow you to easily reposition units to accommodate various specifications. Sliding on the face of the bed rails, combined with universal stops on the sides and back, ensure accurate and consistent placement of extruded or flat sheets. This flexibility enables repeatable production processes.

**Scan QR Code to View the Catalog**



**Tooling shown below mounted on a bed rail.**

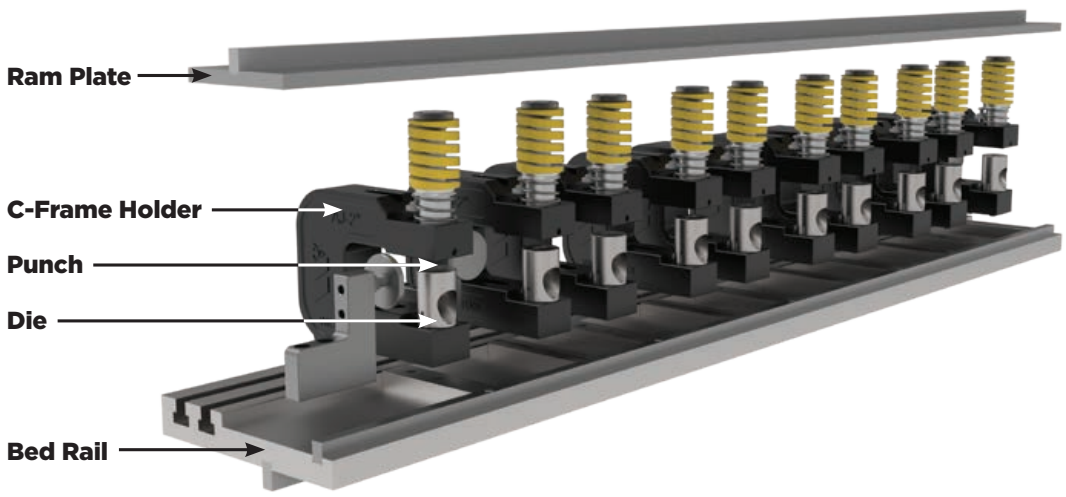

# TONNAGE ESTIMATES

**Making Multiple Bends Formula on a Press Brake**

For shape as shown, in mild steel with radii equal to the metal thickness unless otherwise noted.

## MULTIPLY METAL THICKNESS BY FACTOR = TONS PER FT.

| SHAPE | DESCRIPTION | AIRFORM | BOTTOMING |
|---|---|---|---|
| | VEE DIE | 60 | 150 |
| | WIPING | — | 250 |
| | OFFSET | 150 | 300/600 |
| | MATERIAL THICK OFFSET | 300 | 600 |
| | CHANNEL | 300 | 600 |
| | VEE RIB | 200 | 600 |
| | W DIE | 300 | 600 |
| | OPEN HAT CHANNEL | 300 | 450 |
| | SQUARE HAT CHANNEL | — | 600 |
| | PREFORM CURL | — | 300 |
| | PREFORM CURL | — | 200 |
| | CLOSED CURL | — | 300 |
| | RADIUS | — | 180/300 |
| | (AIR) TEAR DROP | — | 200 |
| | CRUSHED HEM | — | 400 |
| SHAPE CONSIDERATIONS | | Large Radii<br>Angle Variation<br>Concave/Convex sides | Material Thick Radii<br>Min. Angle Variation<br>Maintain Flatness |

| Tonnage Estimation Based on Material Type | |
|---|---|
| | Soft Aluminum, Brass, Copper = Tons x 0.35 |
| | Half Hard Aluminum = Tons x 0.5 |
| | Hard/Heat Treated AL, Mild Steel = Tons x 1.0 |
| | Half Hard Brass, Copper = Tons x 1.1 |
| | Stainless Steel = Tons x 1.5 |
| | High Strength Steel = Tons x 2.75 |





Visit **wilsontool.com/MyAccount** for Drawings, Invoices, Tracking & More!

# AIR BENDING FORCE CHART

## METRIC V-OPENINGS & IMPERIAL TONNAGE

**NOTE:** Formulas and chart are for reference only.

**T =** Material Thickness; **V =** V-Opening; **MF =** Minimum Flange Length; **IR =** Inside Radius

**STANDARD FORMULAS FOR SELECTING A V-OPENING**

**Material Thickness:** 2.6mm or Less = T x 6
3.00mm – 8.0mm = T x 8
9.00mm – 12.00mm = T x 10
14.00mm & Thicker = T x 12

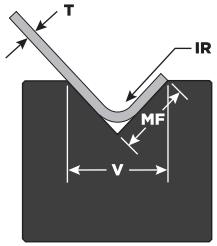


| GAUGE | DEC. inch | [mm] | V (mm) | 4 | 6 | 7 | 8 | 10 | 12 | 14 | 16 | 18 | 20 | 25 | 32 | 40 | 50 | 63 | 80 | 100 | 125 |
|---|---|---|---|---|---|---|---|---|---|---|---|---|---|---|---|---|---|---|---|---|---|
| | | | V (in.) | 0.157 | 0.236 | 0.276 | 0.315 | 0.394 | 0.472 | 0.551 | 0.630 | 0.709 | 0.787 | 0.984 | 1.260 | 1.575 | 1.969 | 2.480 | 3.150 | 3.937 | 4.921 |
| | | | MF | 0.110 | 0.165 | 0.193 | 0.220 | 0.276 | 0.331 | 0.397 | 0.454 | 0.510 | 0.567 | 0.709 | 0.945 | 1.181 | 1.476 | 1.860 | 2.362 | 2.953 | 3.789 |
| | | | IR | 0.026 | 0.039 | 0.046 | 0.052 | 0.066 | 0.079 | 0.092 | 0.105 | 0.118 | 0.131 | 0.164 | 0.210 | 0.262 | 0.328 | 0.413 | 0.525 | 0.656 | 0.820 |
| 20 | 0.036 | [.9] | TONS PER FOOT | 5.4 | **3.6** | 3.0 | 2.5 | 2.0 | 1.7 | | | | | | | | | | | | |
| 18 | 0.048 | [1.2] | | | 7.2 | **5.8** | 4.8 | 3.7 | 2.7 | 2.4 | 2.0 | | | | | | | | | | |
| 16 | 0.060 | [1.5] | | | | | 7.8 | **6.0** | 5.0 | 4.2 | 3.5 | 3.1 | 2.7 | | | | | | | | |
| 14 | 0.075 | [1.9] | | | | | | 11.3 | **7.5** | 7.1 | 5.6 | 4.8 | 4.1 | 3.2 | | | | | | | |
| 13 | 0.090 | [2.3] | | | | | | | 12.5 | **10.1** | 8.2 | 7.2 | 5.4 | 3.7 | | | | | | | |
| 12 | 0.105 | [2.7] | | | | | | | 15.8 | 13.0 | 10.5 | **9.5** | 7.5 | 5.6 | 4.0 | | | | | | |
| 11 | 0.120 | [3] | | | | | | | | | 16.1 | 13.1 | 10.1 | **7.2** | 5.0 | 3.8 | | | | | |
| 10 | 0.135 | [3.4] | | | | | | | | | | | 12.0 | **8.1** | 6.2 | 4.7 | 3.5 | | | | |
| 9 | 0.150 | [3.8] | | | | | | | | | | | | 13.1 | **9.0** | 6.7 | 5.2 | | | | |
| 3/16″ | 0.188 | [4.8] | | | | | | | | | | | | 24.1 | 15.0 | **11.3** | 7.5 | 5.8 | | | |
| 1/4″ | 0.250 | [6.35] | | | | | | | | | | | | | 30.0 | 20.0 | **15.0** | 10.5 | 8.5 | | |
| 5/16″ | 0.313 | [8] | | | | | | | | | | | | | | 37.6 | 25.0 | **18.8** | 13.1 | 10.0 | |
| 3/8″ | 0.375 | [9.5] | | | | | | | | | | | | | | | 38.3 | 28.1 | 22.5 | **15.0** | 11.3 |
| 7/16″ | 0.438 | [11.1] | | | | | | | | | | | | | | | | 35.0 | 28.0 | 24.0 | **17.0** |
| 1/2″ | 0.500 | [12.7] | | | | | | | | | | | | | | | | 52.0 | 39.0 | 30.0 | **22.0** |
| 5/8″ | 0.625 | [16] | | | | | | | | | | | | | | | | | 70.0 | 52.5 | 37.5 |
| 3/4″ | 0.750 | [19] | | | | | | | | | | | | | | | | | | | 66.0 |
| 1″ | 1.000 | [25.4] | | | | | | | | | | | | | | | | | | | |

**Larger v-openings generate less tonnage.**

**Smaller v-openings generate increased tonnage and are NOT recommended.**

**NOTE:** The chart above is based on mild steel (tensile strength of 60,000 PSI) formed to an included angle of 88°. See chart to the right for other materials. Forming to other angles will change the Minimum Flange (MF), Inside Radius (IR) and tonnage.

**Scan QR Code to Watch the Video**

| Tonnage Estimation Based on Material Type | |
|---|---|
| Soft Aluminum, Brass, Copper | = Tons x 0.35 |
| Half Hard Aluminum | = Tons x 0.5 |
| Hard/Heat Treated AL, Mild Steel | = Tons x 1.0 |
| Half Hard Brass, Copper | = Tons x 1.1 |
| Stainless Steel | = Tons x 1.5 |
| High Strength Steel | = Tons x 2.75 |



**Mexico** tel: 001.800.741.2510 doblez@wilsontool.com
**Canada** tel: 800.268.4180 bending@wilsontoolcanada.com
**US Headquarters** tel: 800.445.4518 bending@wilsontool.com

# AIR BENDING FORCE CHART

## IMPERIAL V-OPENINGS & IMPERIAL TONNAGE

**NOTE:** Formulas and chart are for reference only.

**T =** Material Thickness; **V =** V-Opening; **MF =** Minimum Flange Length; **IR =** Inside Radius

**STANDARD FORMULAS FOR SELECTING A V-OPENING**

**Material Thickness:** .105″ or Less = T x 6
.120″ – .313″ = T x 8
.375″ – .500″ = T x 10
.625″ & Thicker = T x 12

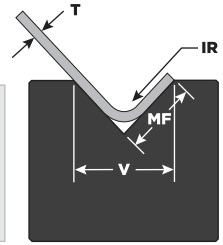


| GAUGE | DEC. inch [mm] | | V (in.) | 0.250 | 0.313 | 0.375 | 0.500 | 0.625 | 0.750 | 0.875 | 1.000 | 1.125 | 1.250 | 1.500 | 2.000 | 2.500 | 3.000 | 3.500 | 4.000 | 5.000 |
|---|---|---|---|---|---|---|---|---|---|---|---|---|---|---|---|---|---|---|---|---|
| | | | MF | 0.180 | 0.225 | 0.270 | 0.360 | 0.450 | 0.540 | 0.630 | 0.720 | 0.810 | 0.900 | 1.080 | 1.440 | 1.800 | 2.159 | 2.519 | 2.879 | 3.599 |
| | | | IR | 0.042 | 0.052 | 0.063 | 0.084 | 0.104 | 0.125 | 0.146 | 0.167 | 0.188 | 0.209 | 0.251 | 0.334 | 0.418 | 0.501 | 0.585 | 0.668 | 0.835 |
| 20 | 0.036 | [.9] | TONS PER FOOT | **2.9** | 2.2 | 1.7 | 1.2 | 1.0 | | | | | | | | | | | | |
| 18 | 0.048 | [1.2] | | 7.0 | **4.0** | 2.9 | 2.2 | 1.6 | 1.3 | | | | | | | | | | | |
| 16 | 0.060 | [1.5] | | | 7.8 | **5.6** | 3.6 | 2.7 | 2.2 | 1.7 | | | | | | | | | | |
| 14 | 0.075 | [1.9] | | | | 11.7 | **6.0** | 4.5 | 3.4 | 3.0 | 2.5 | 2.1 | | | | | | | | |
| 13 | 0.090 | [2.3] | | | | | 12.2 | **6.8** | 5.4 | 4.3 | 3.7 | 3.3 | 2.9 | | | | | | | |
| 12 | 0.105 | [2.7] | | | | | | 10.1 | **7.4** | 6.3 | 5.4 | 4.4 | 4.0 | 3.2 | | | | | | |
| 11 | 0.120 | [3] | | | | | | | 10.5 | 8.8 | **7.2** | 6.2 | 5.4 | 4.3 | 3.2 | | | | | |
| 10 | 0.135 | [3.4] | | | | | | | | 11.3 | 9.6 | **8.4** | 7.0 | 5.6 | 4.1 | | | | | |
| 9 | 0.150 | [3.8] | | | | | | | | | 13.1 | 11.9 | **9.0** | 6.7 | 5.2 | 3.5 | | | | |
| 7 | 0.188 | [4.8] | | | | | | | | | | 16.4 | 14.0 | **11.2** | 7.6 | 5.8 | 4.5 | | | |
| 1/4″ | 0.250 | [6.35] | | | | | | | | | | | 28.8 | 22.0 | **15.3** | 11.5 | 9.1 | 7.5 | 6.2 | |
| 5/16″ | 0.312 | [8] | | | | | | | | | | | | 38.0 | 26.0 | **19.2** | 16.0 | 12.5 | 10.6 | 7.6 |
| 3/8″ | 0.375 | [9.5] | | | | | | | | | | | | | 41.0 | 29.9 | 24.0 | **19.4** | 16.0 | 12.3 |
| 7/16″ | 0.438 | [11.1] | | | | | | | | | | | | | | 45.2 | 35.0 | 28.0 | **24.0** | 17.0 |
| 1/2″ | 0.500 | [12.7] | | | | | | | | | | | | | | | 47.9 | 39.0 | 33.1 | **24.0** |
| 5/8″ | 0.625 | [16] | | | | | | | | | | | | | | | | 69.5 | 58.0 | 42.2 |
| 3/4″ | 0.750 | [19] | | | | | | | | | | | | | | | | | 92.0 | 69.0 |
| 7/8″ | 0.875 | [22] | | | | | | | | | | | | | | | | | | 104.0 |
| 1″ | 1.000 | [25.4] | | | | | | | | | | | | | | | | | | |

Larger v-openings generate less tonnage.

Smaller v-openings generate increased tonnage and are NOT recommended.

**NOTE:** The chart above is based on mild steel (tensile strength of 60,000 PSI) formed to an included angle of 88°. See chart to the right for other materials. Forming to other angles will change the Minimum Flange (MF), Inside Radius (IR) and tonnage.

**Scan QR Code to Watch the Video**

| Tonnage Estimation Based on Material Type | |
|---|---|
| Soft Aluminum, Brass, Copper | = Tons x 0.35 |
| Half Hard Aluminum | = Tons x 0.5 |
| Hard/Heat Treated AL, Mild Steel | = Tons x 1.0 |
| Half Hard Brass, Copper | = Tons x 1.1 |
| Stainless Steel | = Tons x 1.5 |
| High Strength Steel | = Tons x 2.75 |



Visit wilsontool.com/MyAccount for Drawings, Invoices, Tracking & More!

# PRESS BRAKE SPECIALS CHECKLIST

| | |
|---|---|
| Company: | |
| Contact: | |
| Phone: | Sales Engineer: |
| Quote #: | Sales Desk Contact: |

| MACHINE SPECIFICATIONS | | | |
|---|---|---|---|
| BRAKE MAKE/MODEL | | TONNAGE | |
| OVERALL LENGTH | | APPROX. AGE | |
| STROKE | *Open Height* | *Closed Height* | |

| TOOLING AND APPLICATION | | | |
|---|---|---|---|
| TOOLING TYPE | ☐ American ☐ European ☐ WT ☐ Bystronic ☐ Other | | |
| LENGTH OF BEND | | | |
| MATERIAL TYPE | | THICKNESS | |
| Is customer currently performing this bend? ☐ Yes ☐ No<br>If YES, specify if this is a ☐ Wilson Tool Repeat ☐ Replicate Customer Tool ☐ Redesign | | | |
| Explain: | | | |

| TOLERANCE BLOCK | |
|---|---|
| PART RADII TOLERANCE | *Tolerances tighter than ±5% may affect price/lead time* |
| PART BEND ANGLE TOLERANCE | *Tolerances tighter than ±3% may affect price/lead time.* |
| ESTIMATED ANNUAL USAGE | |

# TOOL STORAGE

## XTREME STORAGE CABINET

- Vertical configuration for drawer access from either side
- High-capacity drawers have a keyed lock and open smoothly with rolling casters
- Vertically adjustable trays maximize space for the height of tooling
- Adjustable tray inserts accommodate up to two rows of various tooling profiles. Removable center channel for larger tooling.
- Drawer trays hold punches in tip-up position
- Shallow top tray in each drawer for storing small items/hand tools
- Relatively small footprint allows for placement close to the machine

| Xtreme Storage Cabinet Detail | Catalog Numbers | | | |
|---|---|---|---|---|
| | 5103W | 5104W | 5105W | 5106W |
| **Number of Drawers** | 3 | 4 | 5 | 6 |
| **Cabinet Height** (outside dim.) | 62″ [1575mm] | 62″ [1575mm] | 62″ [1575mm] | 62″ [1575mm] |
| **Width** (left to right – outside dim.) | 23″ [585mm] | 30″ [762mm] | 37″ [940mm] | 44″ [1118mm] |
| **Depth / Tool Space** (front to back – inside dim.) | 44″ [1118mm] | 44″ [1118mm] | 44″ [1118mm] | 44″ [1118mm] |
| **Number of Tool Trays** | 12 | 16 | 20 | 24 |
| **Total Length* of Tooling** (1 tool/tray – inside dim.) | 40′ [12.1m] | 53′ [16.1m] | 66.5′ [20.2m] | 80′ [24.3m] |
| **Total Length* of Tooling** (2 tools/tray – inside dim.) | 80′ [24.3m] | 106′ [32.3m] | 133′ [40.5m] | 160′ [48.7m] |

*Total length does not include available storage in the top trays.

## TRAY DIMENSIONS

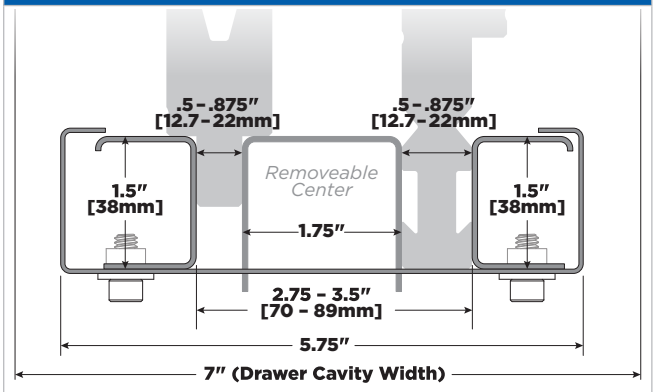


## CUSTOM COLOR OPTIONS

| | | | | | | |
|---|---|---|---|---|---|---|
| 051 Everest Blue | 052 Classic Blue | 055 Avalanche Blue | 057 Midnight Blue | 560 Glossy Sapphire Blue | 1025 Glossy EverGreen | 208 Glossy Yellow |
| 085 Sienna Orange | 081 Flame Red | 806 Glossy Carmine Red | 041 Beige | 061 Frost White | 071 Light Gray | 745 Modern Gray |
| 072 Charcoal Gray | 815 Glossy Cranberry Red | 091 Black | 902 Glossy Black | 741 Glossy Carbon Black | 616 White | |

*Colors may differ slightly from those shown.
Allow 15 working days lead time for custom colors.





Visit **wilsontool.com/MyAccount** for Drawings, Invoices, Tracking & More!

# TOOL STORAGE

## LAY-DOWN CABINET FOR PRESS BRAKE TOOLING

- 9 drawers for punches and dies lined with blue, industrial-strength, closed cell foam
- Lay down design displays laser markings and makes for easy identification of tools
- Heavy-duty construction with reinforced drawers for industry leading twist strength
- Solid steel construction
- Rated capacity of 3,600 lbs.
- Total weight capacity: 440 lbs. per drawer
- One-drawer-at-a-time integrated locking
- Retainer top with rubber mat
- Stationary cabinets have a removable kick-plate for fork lift transportation
- Mobile base option with side handle has heavy-duty casters and extended wheel base to prevent tipping
- Cabinets ship via freight truck

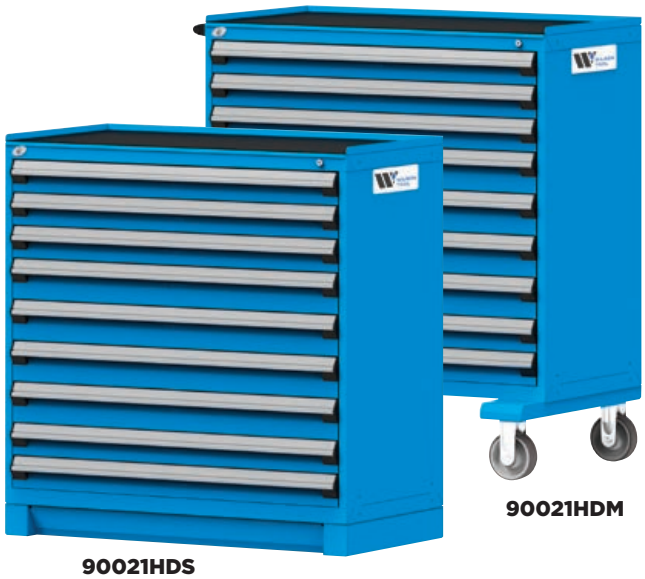

90021HDM

90021HDS

Additional cabinets available — Contact our Tooling Technicians for pricing and lead times.

| Part No. | Description | W x D x H | Drawer Sizes |
|---|---|---|---|
| **90021HDS** | Stationary | 48″ x 27″ x 49″ | 5 – 2.25″ [57.1mm]<br>4 – 3.25″ [82.5mm] |
| **90021HDM** | Mobile | 48″ x 27″ x 53.5″ | |

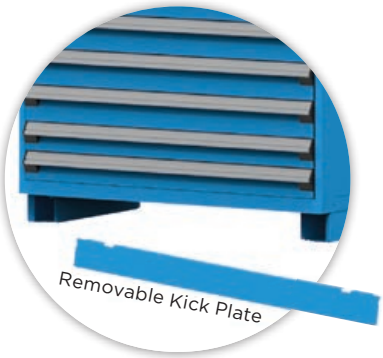


### CUSTOM COLOR OPTIONS

| | | | | | | | | | |
|---|---|---|---|---|---|---|---|---|---|
| 051 Everest Blue | 052 Classic Blue | 055 Avalanche Blue | 057 Midnight Blue | 560 Glossy Sapphire Blue | 041 Beige | 061 Frost White | 071 Light Gray | 745 Modern Gray | 072 Charcoal Gray |
| 1025 Glossy EverGreen | 208 Glossy Yellow | 085 Sienna Orange | 081 Flame Red | 806 Glossy Carmine Red | 815 Glossy Cranberry Red | 091 Black | 902 Glossy Black | 741 Glossy Carbon Black | 616 White |

**Colors may differ slightly from those shown. Allow 15 working days lead time for custom colors.*

# MARK-FREE BENDING

## URETHANE ROLLS — 6 in. x 100 ft.

| Part No. | Thickness | Durometer | Description |
|---|---|---|---|
| 42530 | .015″ [.4mm] | 85A (Milky White) | • More elastic than blue<br>• Well suited for deeper draw applications<br>• Will not last as long as blue for 90° bends |
| 42531 | .030″ [.8mm] | | |
| 42532 | .022″ [.56mm] | 95A (Blue) | • A more ridged solution<br>• Lasts considerably longer than the white options in many applications<br>• Harder and less elastic than blue<br>• Not suited for deeper draw applications |

*Note: This is not a good time to cheat the V-opening and make it smaller. Keep in mind you are filling the V-opening with two thicknesses of urethane so it would be safer to oversize the V-opening a bit. The larger the shoulder radius, the larger the V-opening relative to the material type and thickness, the longer the life will be realized.*

## PROTECTIVE FABRIC DRAPE

Forms a protective barrier between the sheet metal and the die shoulders during the bending process. Lasts 5–8 times longer than a urethane drape.

| Part No. | Description |
|---|---|
| 55335 | 12.5m [41′] length x 120mm [4.7″] width |
| 55337 | 12.5m [41′] length x 240mm [9.5″] width |
| 988156 | 3/8″ x 1/2″ Cylinder Magnet w/Blue Grip Cover |

## DRAPE HOLDER

Part No. 55338

Magnetic body provides quick, secure attachment to any press brake die or die holder. Hex head bolts allow for front-to-back adjustment of material placement and easy material swaps. Low-profile design helps avoid bulky rolls getting in the operator's way.





Visit **wilsontool.com/MyAccount** for Drawings, Invoices, Tracking & More!

# GAUGING TOOLS

## MAGNETIC SQUARING ARM

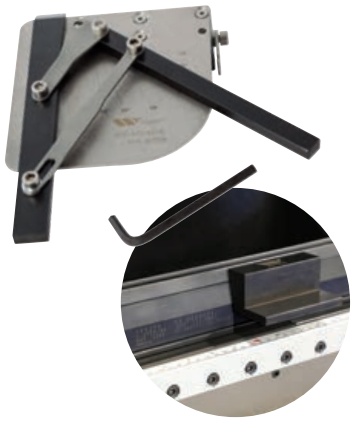

Increase bending accuracy with this simple hand tool. Suitable for any press brake die with a flat surface for easy attachment. Adjustable from 0° or 90° and is available in a left-handed or right-handed version.

| Part No. | Description |
|---|---|
| 42750L | Magnetic Squaring Arm LEFT |
| 42750R | Magnetic Squaring Arm RIGHT |
| 42750A | 30° Die Adapter |

## DIAL ADJUSTABLE SQUARING ARM

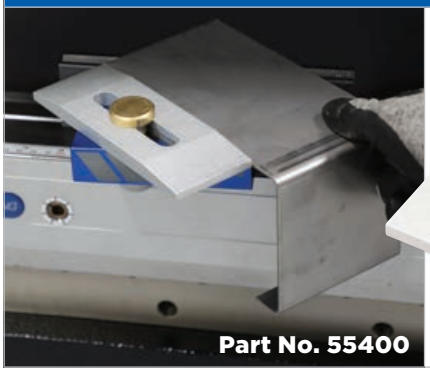

Infinite angle squaring arm with tool-free adjustment can be used as a left or right hand gauge. Significant magnetic holding power keeps the unit in place. Small enough to be out of the way, yet big enough to provide a sizable surface to rest the material being bent.

## MAGNETIC SQUARING BLOCK

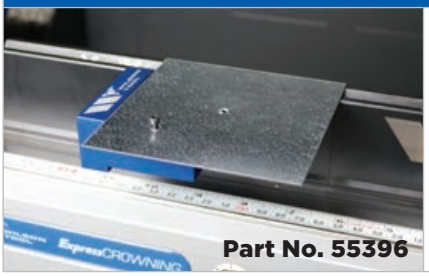

Versatile, durable, 90° squaring block for left or right support and gauging. Strong magnets hold the lightweight tool in place while allowing for easy repositioning.

## MAGNETIC GAUGE

Use for back gauging, gauging outside the frame of the brake, front gauging, or when the part doesn't quite work with part configuration.

| Part No. | Description |
|---|---|
| 988741 | Blue Threaded Cap |

# MEASURING TOOLS

## DIGITAL ANGLE CUBE

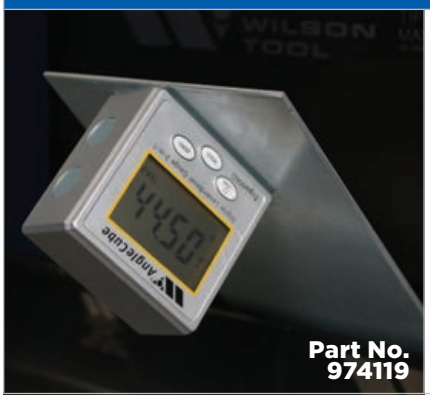

The compact size of the Digital Cube allows you to quickly read bend angles of work material. Real time display of angle comparison. Magnets on three sides. Self-rotating display for 180° readings.

# HAND TOOLS

## METRIC HEX KEY WRENCH SET

**Part No. 6105**

Metric 9 piece long arm set.
Contains: 1.5 x 77, 2 x 83,
2.5 x 90, 3 x 98, 4 x 106, 5 x 118,
6 x 137, 8 x 156, 10 x 170

## SOFT FACE HAMMER

**Part No. 6106**

Polyurethane dead-blow hammer.
Steel pellets inside hammer head
impact a split second after the
hammer face, reducing rebound.

## MAGNET SQUARE

**Part No. 974150**

ON/OFF work holding magnet.
150 lb. [70 kg] of hold force.
Size: [30] Square





Visit **wilsontool.com/MyAccount** for Drawings, Invoices, Tracking & More!

# THE DIVISIONS OF WILSON TOOL

## BENDING

**Wilson Tool's Bending division delivers the most complete line of tooling and clamping solutions available anywhere.**

Whether you use American, European, WT, Bystronic or LVD-style precision or conventional tooling, Wilson Tool has a solution for you. Our clamping options cover these styles as well. With hydraulic push button, quick release mechanical or standard manual clamps, we have a clamping solution for any style of machine or budget. And our custom tooling manufacturing capabilities are the envy of the industry with innovative solutions for complex bending challenges. With manufacturing facilities located in the USA and Canada, our delivery times to North American fabricators are the fastest in the industry.

## STAMPING

**Wilson Tool's Stamping division, Impax Tooling Solutions®, offers high quality punch and die components, accessories and retainers for the stamping industry.**

Innovative products such as our HP Accu-Lock® Retainer Inserts and extensive coating options, combined with our world-class customer service, have enabled us to quickly grow into a world-class provider. With a direct sales force throughout North America, we deliver products straight from the factory to you, enabling the fastest deliveries in the industry. Our custom tooling expertise is second to none with many customers coming to us for their most difficult stamping challenges.

## PUNCHING

**Wilson Tool's Punching division continues to drive the industry with new levels of quality, delivery, service and innovation.**

From the early days of Series 80 to the Wilson Wheel® Family to EXP® technology, our punching division has been the industry-leading innovation driver. Combined with the most experienced customer support professionals in the industry, Wilson Tool continues to raise the bar. Thick turret, TRUMPF-style, Salvagnini-style, or any other style of punch press you may be using, Wilson Tool offers the most complete line of tooling solutions available today.

TRUMPF is a trademark of TRUMPF GmbH + Co. KG.

## ACCESSORIES

Whether you need storage systems, grinders, urethane rolls, hand tools or related supplies, we offer a wide range of solutions to help you be more productive, organized and efficient.

# WILSON TOOL INTERNATIONAL HEADQUARTERS

12912 Farnham Avenue N, White Bear Lake, MN 55110, USA
**800.445.4518 | bending@wilsontool.com**

**Canada** 800.268.4180 bending@wilsontoolcanada.com
**Mexico** 001.800.741.2510 doblez@wilsontool.com

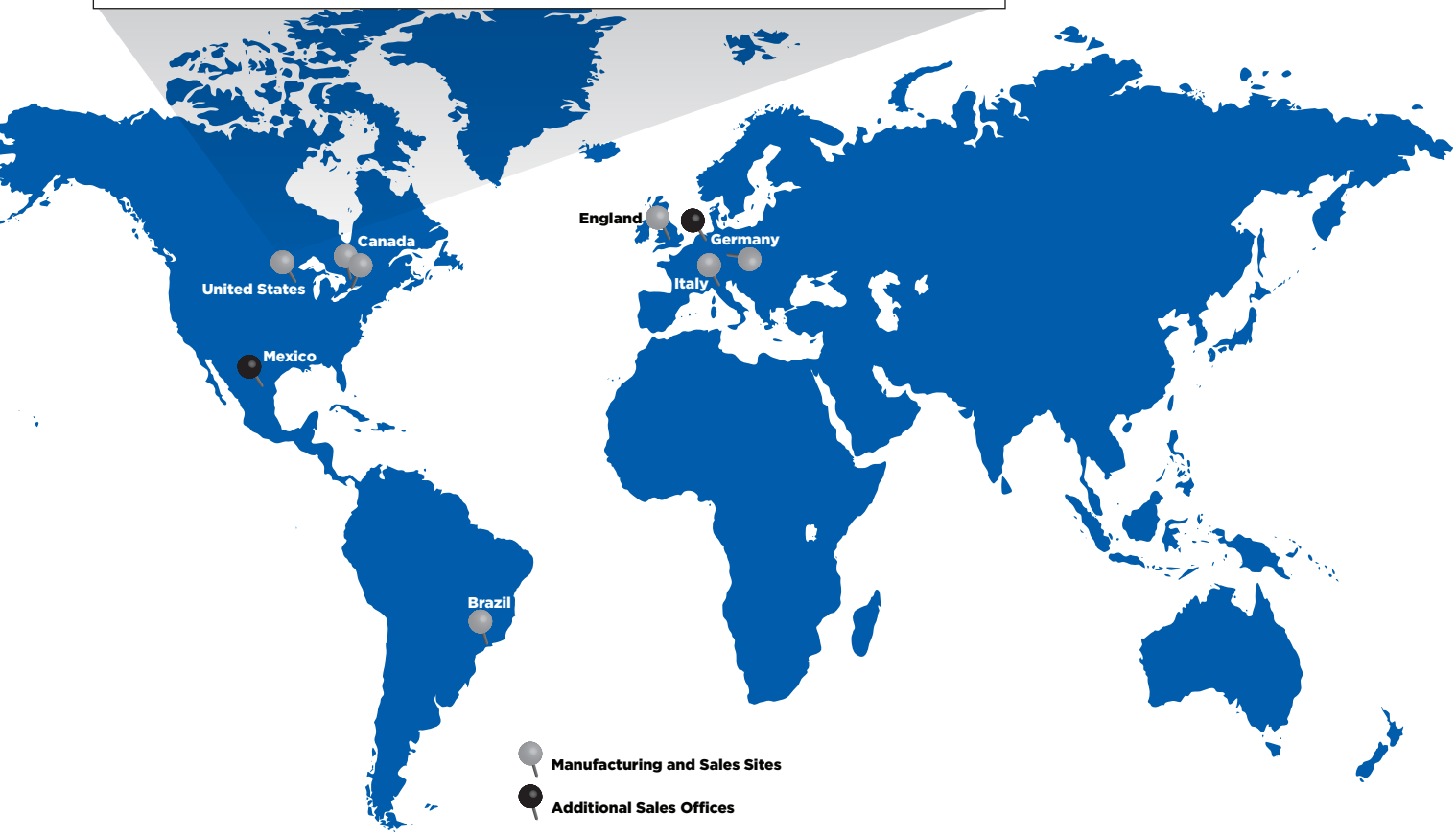


# GUARANTEED TO OUTPERFORM

With Wilson Tool International, you're not just receiving tools — you're gaining a partner dedicated to your productivity, and products backed with a guarantee to outperform your current tooling.

WILSON TOOL®

B390C 3.2026

© Wilson Tool International. All rights reserved.
All trademarks are the property of their respective owners.